# The Power Plant Library

BUHLER'S
BOOKS
NO.---
***

BUHLER
BOOKS
NO.---
*****

THE POWER PLANT LIBRARY

5–6

McGraw-Hill Book Company

*Publishers of Books for*

Electrical World
The Engineering and Mining Journal
Engineering Record
Engineering News
Railway Age Gazette
American Machinist
Signal Engineer
American Engineer
Electric Railway Journal
Coal Age
Metallurgical and Chemical Engineering
Power

# VALVE SETTING

## SIMPLE METHODS OF SETTING THE PLAIN SLIDE VALVE, MEYER CUT-OFF, CORLISS, AND POPPET TYPES

COMPILED AND WRITTEN BY

HUBERT E. COLLINS

FIRST EDITION
SIXTH IMPRESSION

McGRAW-HILL BOOK COMPANY, INC.
239 WEST 39TH STREET. NEW YORK

LONDON: HILL PUBLISHING CO., LTD.
6 & 8 BOUVERIE ST., E. C.

Copyright, 1908, by the Hill Publishing Company

# INTRODUCTION

SUPERVISING, operating, and erecting engineers have long felt the need of a book giving simple, practical instructions in the setting of valves for all kinds of engines. *Power* has from time to time published articles covering the leading types, and this book is based on the material contributed for this series.

In the main, the articles are secured from builders or erecting men who are familiar with the practical work involved, and in every case the work has been passed upon and approved by the builders.

Recognizing the fact that the fundamental principles of all valve design are contained in the slide valve movement, the first three chapters of this book are given to a study of this subject. Afterwards a general idea of the Meyer valve movement is given and then the Corliss.

In Chapter IV, written by the compiler of this book, are given general rules for finding crank and eccentric centers which can be applied to any make of reciprocating engine. These rules are a valuable aid in valve setting. Careful consideration of the first five chapters will enable a man to grasp any other part of the book where special makes of engines are described, and will be highly useful to any man meeting any problem in valve setting, whether described in detail in this book or not.

The compiler of this book is greatly indebted to the following men who have contributed material to *Power* which is embodied in this book:

E. S. Hawkins, John L. Flock, Thomas Hall, F. L. Johnson, Carl S. Dow, F. F. Nickel, Claude Aikens, and E. F. Williams.

HUBERT E. COLLINS.

NEW YORK, July 1908.

# CONTENTS


| CHAPTER | | PAGE |
|---|---|---|
| I. | The Slide Valve Explained | 3 |
| II. | A Study of the D Slide-Valve | 19 |
| III. | A Study of the Zeuner Slide-Valve Diagram | 29 |
| IV. | The Riding Cut-off Valve | 38 |
| V. | The Corliss Steam Engines | 53 |
| VI. | The Greene-Wheelock Engine | 62 |
| VII. | The Brown Engine | 76 |
| VIII. | The McIntosh & Seymour Engine | 84 |
| IX. | The Buckeye Engine | 92 |
| X. | The Porter-Allen Engine | 103 |
| XI. | The Fitchburg Engine | 111 |
| XII. | The Fleming Piston-Valve Engines | 121 |
| XIII. | The Putnam Engine | 130 |
| XIV. | The Sturtevant Compound Engine | 135 |
| XV. | The Rice & Sargent Engine | 145 |
| XVI. | Reynolds (1890) and Girder Frame Corliss Engines | 152 |
| XVII. | The Wright Steam Engine | 159 |
| XVIII. | The Reynolds Long-Range Cut-off | 172 |
| XIX. | The Duplex Pump | 180 |
| XX. | Air Compressors | 188 |
| | INDEX | 203 |

# VALVE SETTING

# I

## THE SLIDE VALVE EXPLAINED

THE simplest form of slide valve is shown in Fig. 1. As will be seen, there is neither steam lap, positive exhaust lap, nor negative exhaust lap. The valve is shown at the center of its travel, that is, located centrally over the ports. The references *S P*, *S P* denote the cylinder ports; *E P*

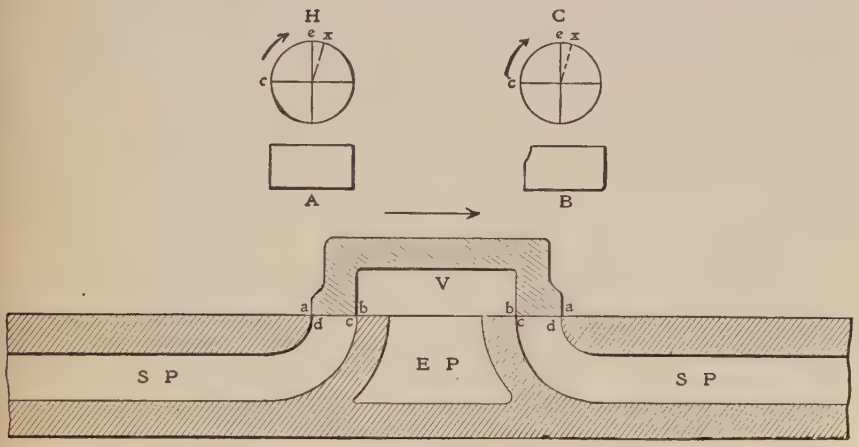


FIG. 1.

is the exhaust port; *V* is the valve; *a a* are the steam edges of the valve, and *b b* the exhaust edges; *c c* are the exhaust edges, and *d d* the steam edges, of the cylinder port.

Above the valve are shown the valve circles, one for each end. The eccentric position is at *e* when the crank is at *c*, at the end of the stroke. The eccentric is 90 degrees ahead of the crank when the valve has no lap nor lead. When lead is added, the eccentric will be advanced to some position beyond 90 degrees, say to the point *x*. It will be noted that if lead were added, the valve and crank moving in the direction denoted by the arrows, the cylinder port on the head end would be open to the admission of steam between the steam edges *a* and *d* on that end, and at the same time the steam would be exhausting from the other cylinder port through

the edges *b* and *c* on the crank end. In Fig. 1, there being no valve lap, the travel of the valve is equal to twice the width of the port. The added lead does not change the valve travel, but causes an earlier action, as shown by the small diagrams *A* and *B* below the circles. Of these, *A* shows the kind of diagram which would result with no lead, while *B* shows the effect of lead.

## Lead and Lap

Lead, or the angular advance of a valve, is the amount of opening to the cylinder port, or the distance between the edges *a* and *d* when the piston is at the beginning of its stroke. (This is more fully shown in Fig. 4, where the arrow *A* denotes the direction of the steam through such opening.) The action of "lead" is threefold: First, it admits steam to the piston before it has arrived at the end of the stroke, and this steam acts as a cushion, enabling the piston to reverse its motion easily; second, it assists the admission of steam, tending to permit the steam passage to become supplied with steam at full steam-chest pressure by the time the piston reverses its motion; third, it assists the exhaust, which is of especial importance to a valve like that shown in Fig. 1.

The diagram *A* shows no early action, but the diagram *B* shows cut-off before the end of the stroke and release and compression at between 95 and 100 per cent. of the stroke.

With no steam lap nor lead, the steam is admitted full stroke and does not give up the energy which might be realized from its expansion. By adding lead, one step in the right direction is taken, but it is not insufficient for the reason that with a minimum of lead, with no steam lap, the steam on the exhaust side cannot escape quickly enough to prevent its exerting a back pressure on the piston.

"Lap," as generally used, and unless otherwise specified, means steam lap, and "steam lap" means the amount the steam edges *a a*, Fig. 2, overlap the steam edges *d d* when the valve is in the mid-position. The steam lap is provided mainly to cut off the supply of steam from the steam chest into the cylinder at some point earlier than the end of the stroke, and the point of the stroke where the supply is cut off is called the "point of cut-off." The determination of this point depends upon the speed of the engine.

Another object of the steam lap is the obtainment of free exhaust, which is of great importance in a high-speed engine. Increased valve lap calls for increased travel, which also aids exhaust.

The difference in valve travel, with and without lap, will be seen by comparison of the valve-travel circles in Figs. 1 and 2. In Fig. 1 it is shown that the valve travel equals twice the width of the port, while

Fig. 2 shows that the valve travel is equivalent to twice the width of the port plus the lap. When the valve is in mid-position, as in Fig. 2, the steam edges *a a* are in positions corresponding to the center of travel *a' a'*. At this point the valve is lapped on the steam edges, and the exhaust edges *b b*, not being lapped, are line and line with the exhaust edges *c c* of the cylinder ports. When the valve moves in one direction, so that one steam edge *a* of the valve becomes even with the steam edge *d* of the port, it will correspond with the point *d'* in the valve circle; while the other edge *a* has advanced to the point *f* on the valve seat, which corresponds to the point *f'* in the valve circle, and the edge *b* on this end

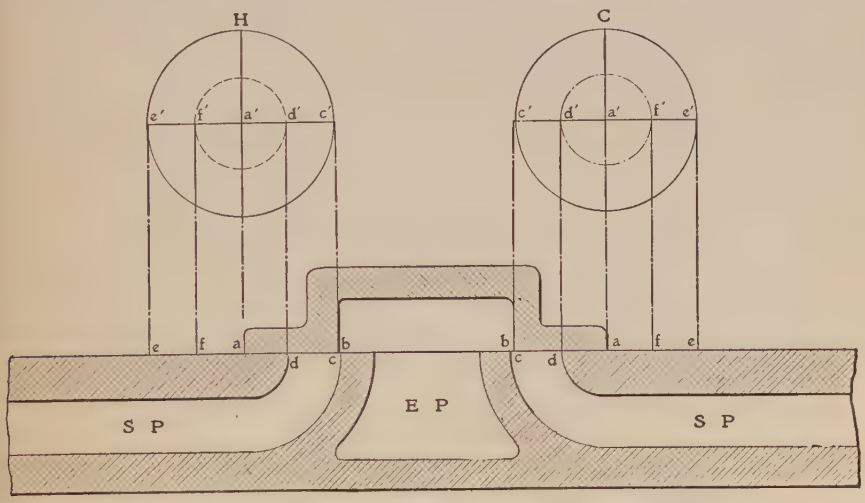


FIG. 2.

has advanced to the edge *d* of the steam port. The valve would then be in position to admit steam to one port and leave the opposite port wide open for exhaust.

Where the edge *a* of the valve has advanced to the edge *c* of the cylinder port, the opposite edge *a* has advanced to the point *e* on the valve seat, corresponding to the point *e'* in the valve circle. The steam port on the one side is now wide open, and the exhaust port on the other side is still wide open. At this juncture the valve has reached the limit of its travel in one direction, and upon reversing its travel the first edge *a* of the valve reaches the edge *d* of the port and cuts off the steam at about three quarters of the piston travel. The valve continuing until the edge *a* meets the point *a* on the valve seat, the exhaust has again closed on one end and is about to open at the other end; and so the action continues.

## Tracing the Action in Detail

To get a more complete understanding of this, it will be well to follow the valve action, by means of Fig. 3 and succeeding illustrations, through one complete revolution of the crank of the engine. The lap represented is 25 per cent. of the travel, the two valve circles being so placed with reference to the valve as to clearly indicate the action of each end. In all the illustrations the position of the crank on the circle is shown at *c*,

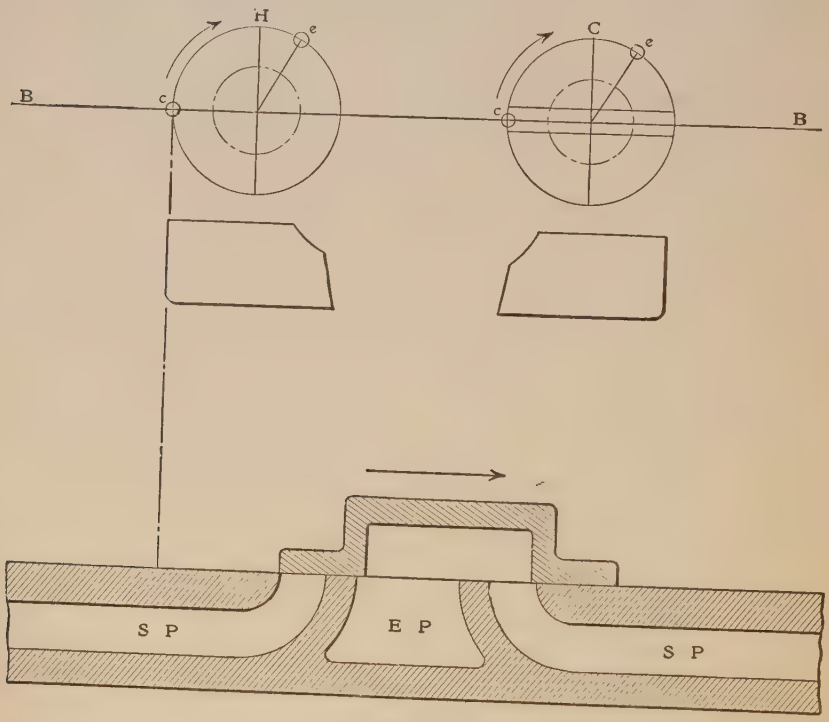


FIG. 3.

and the position of the eccentric, in relation to the crank, at *e*. The graduated scale in several of the crank-end circles is for convenience in identifying the position of the crank in per cent. of stroke at any point of the valve movement. The point of intersection with the line *B B* of the arc of a circle which would bisect the crank-end circle *C* shows the relative position of the piston in per cent. of its stroke. The valve circles are marked *H* and *C* to indicate the head and crank ends of the cylinder, respectively. The arrows denote the direction of movement, and the ports and edges are the same as in Figs. 1 and 2.

Fig. 3 shows the valve about to open, with the position of the eccentric *e*, in relation to the position of the crank *c*, as shown, or when the angle of advance is just sufficient to overcome the lap. With the angular advance no greater than that indicated, diagrams such as those shown beneath the circles are obtained, the principal features of which are cut-off when near 75 per cent. of the piston travel and release and compression at from 90 to 95 per cent. of the stroke. It will be noted that while the exhaust (owing to greater valve travel than shown in Fig. 1) is full open at the same position of the crank, neither release nor compression sets in much earlier in the stroke.

In Fig. 4 the same valve is given lead, while the crank still remains at the beginning of the stroke. This admits steam in the direction of

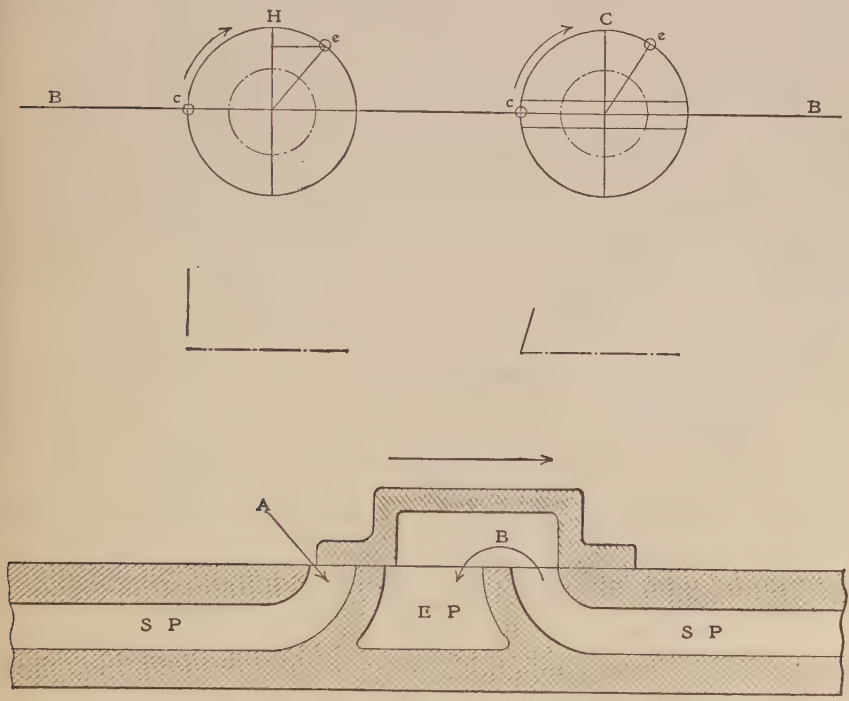


FIG. 4.

the arrow *A*, the exhaust being in the direction of the arrow *B* at the same time.

In Fig. 5 the head-end steam port is full open at the same time that the crank-end exhaust is still full open. The eccentric *e* is at the end of its travel and the crank *c* is relatively in the position shown. The piston would be at about 30 per cent. of its travel.

Fig. 6 shows the valve at the point of cut-off for the head end. The steam is cut off and the exhaust still remains open on the crank end. The piston has reached about 75 per cent. of its travel, with the crank and eccentric as shown.

Fig. 7 shows the exhaust about to release on the head end, and just closed for compression on the crank end. The piston has reached nearly 93 per cent. of stroke.

Fig. 8 shows the cylinder port on the head end wide open for exhaust, and the crank end of the valve open for lead on the crank-end port, with the piston at the beginning of its return stroke.

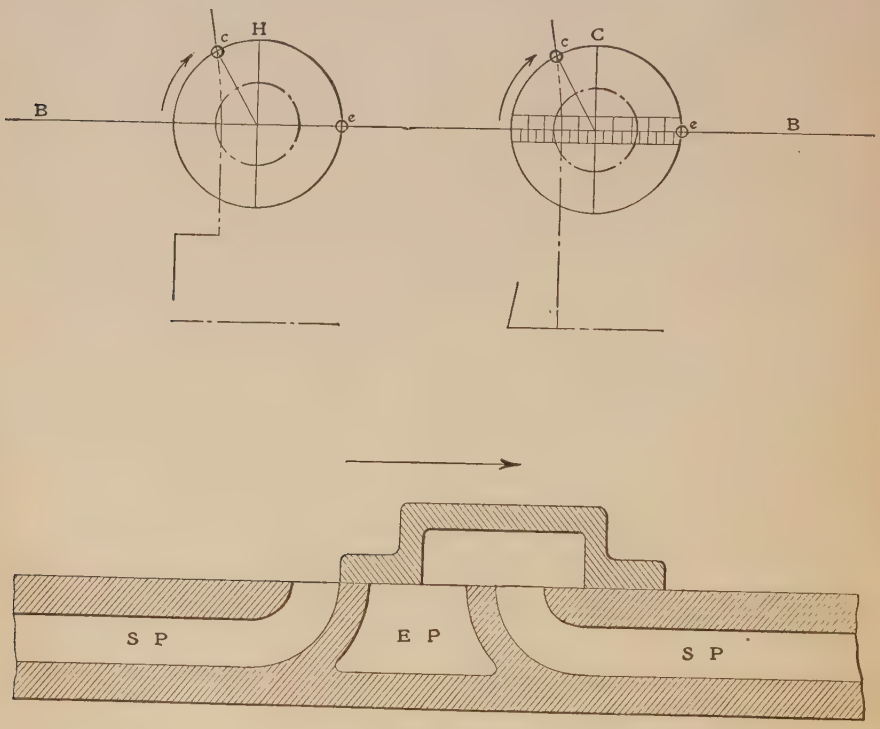


FIG. 5.

Fig. 9 shows the valve having reached the extreme of its travel in the direction shown, leaving the head-end port wide open for exhaust and the crank-end port wide open for steam, the piston having advanced to about 25 per cent. of its return stroke.

Fig. 10 shows the valve at the point of cut-off on the crank end, with the head-end port still open to the exhaust. The piston in this case will not have traveled quite as far as it did on the head-end cut-off.

Fig. 11 shows the valve centered on its travel again, with the exhaust

just closed on the head end, and at the point of release on the crank end. The piston has reached about 90 per cent. of its return travel.

## How the Indicator Diagram is Made

Suppose an indicator were located at each end of the cylinder, with the pencil points in contact at the beginning of the valve action shown in these illustrations, for the purpose of making simultaneous records. Then referring back to Fig. 4, it will be found that the line of admission has been recorded on the head end and the line of release on the crank end.

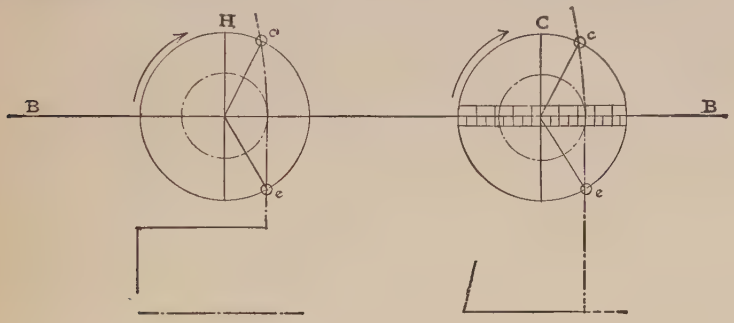


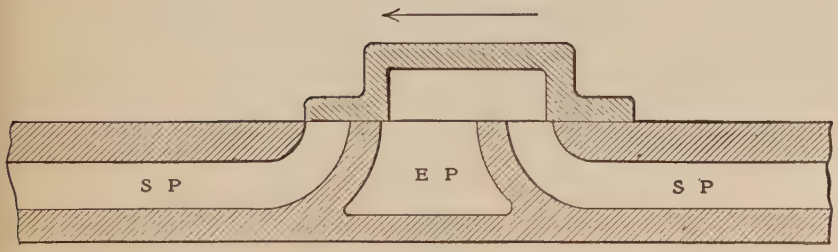


FIG. 6.

Fig. 5 shows the admission line being recorded on the head end and the counter-pressure line on the crank end. Fig. 6 shows the admission line on the head end completed up to the point of cut-off, and the counter-pressure line on the crank end still extending. Fig. 7 shows that the expansion line on the head end has been developed to the point of release, and the counter-pressure line on the crank end has arrived at the point of compression, or exhaust closure. Fig. 8 shows that the release line on the head end has developed, and that compression and admission have

occurred on the crank end. Fig. 9 shows the start of the counter-pressure line on the head end, and the admission line on the crank end, also. Fig. 10 shows the head-end counter-pressure line still extending and the crank-end admission line extended to the point of cut-off. Fig. 11 shows the completed action with the following approximate results:

| | Head End | Crank End |
|---|---|---|
| Cut-off, per cent. of stroke | 75 | 73 |
| Release, per cent. of stroke | 91 | 90 |
| Compression, per cent. of stroke | 90 | 91 |

## Positive and Negative Exhaust Lap

In adding sufficient steam lap to bring about good cut-off, the exhaust is apt to be released too early, and exhaust lap is provided to obviate such

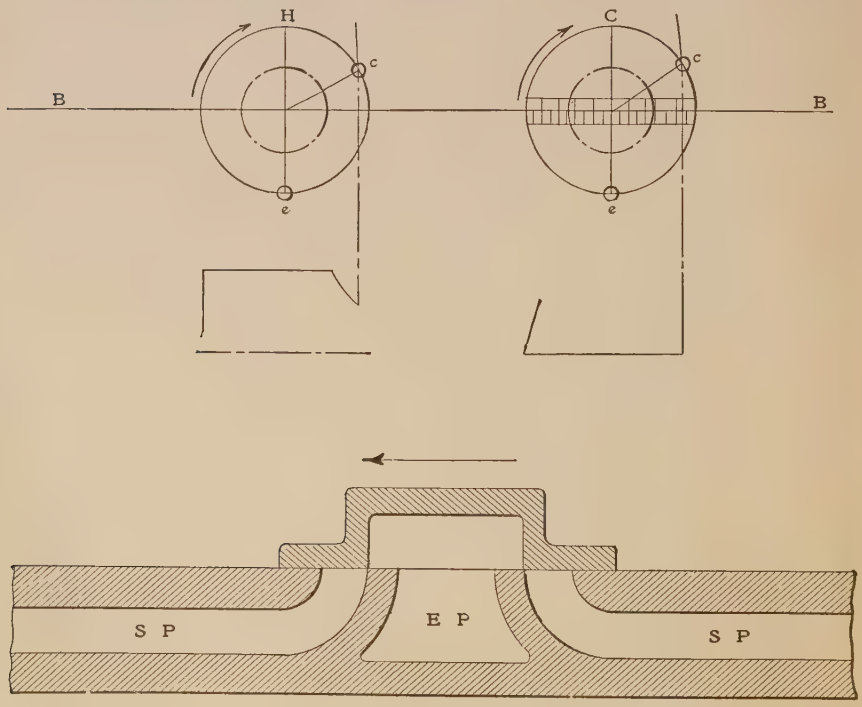


FIG. 7.

defect. Exhaust lap is the amount the exhaust edges (*b b*, Fig. 12) of the valve overlap the exhaust edges *c c* of the cylinder ports when the valve is in mid-position, as shown. In Fig. 12 the valve travel is equal

to twice the width of the port plus the steam and exhaust lap, with the center and extremes of travel as shown by the circle.

Where valves require small steam lap or excessive travel, it is sometimes necessary to provide negative or exhaust clearance to free the exhaust. Negative lap or exhaust clearance is the amount of opening (Fig. 13) between the exhaust edges *b b* of the valve and the exhaust edges *c c* of the cylinder ports when the valve is in the mid-position of its travel. In

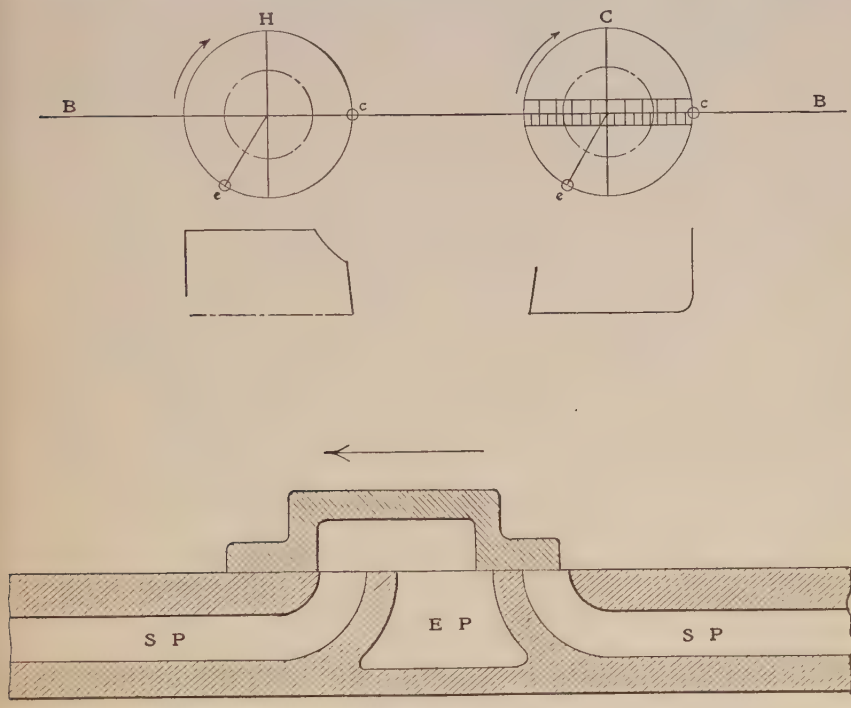


FIG. 8.

Fig. 13 the valve travel will equal twice the width of the port, plus the steam lap, as in Fig. 2.

## Other Important Considerations

Referring to Fig. 14, *linear advance* of an eccentric is the linear distance equaling the lap and lead measured on a like perpendicular to the 90-degree radius *H c*, meeting the circumference of the circle of the eccentric revolution, as at *B*. The distance *A B* is the linear advance.

*Angular advance* of an eccentric is the angle corresponding to a sine whose length is twice the lap in per cent. of travel. For example, the angle *H c B*, Fig. 14.

### Example

The steam lap is assumed to be 25 per cent. of the valve travel and there is no lead; what is the angular advance?

The valve travel in the illustration (Fig. 14) is proportional to the line *E F*. Twenty-five per cent. of this multiplied by two equals one half of the radius *c F*. By referring to a table of natural sines, it is seen that the angle corresponding to a sine equaling 0.50 is 30 degrees. In this case, then, 30 degrees is the angular advance.

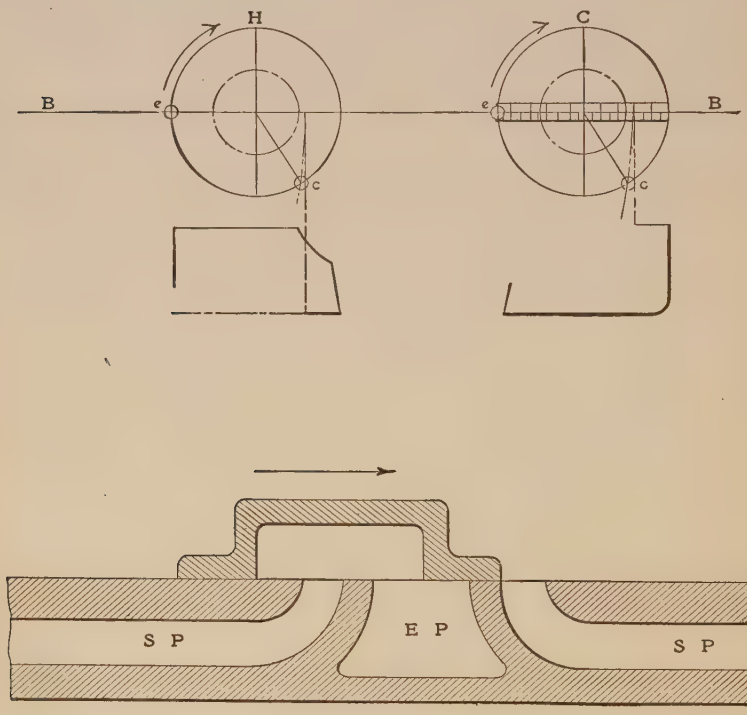


FIG. 9.

In case there is lead, the lead angle must be added, as follows: Lap, 25 per cent.; lead, 2 per cent.; total, 27 per cent. Then, $27 \times 2 = 0.54$. Referring again to the table, the angle of advance is found to be 32 degrees minus 41 minutes.

The *angle of admission* is the angle the crank pin passes through (beginning at the end of the stroke) prior to cut-off. It is always 180 degrees minus twice the angular advance, as, for example, the angle *E c B*, Fig. 14. In the above example, the angle of admission would be 180

degrees — (32 degrees 41 minutes × 2) = 114 degrees 38 minutes. It follows that if there were no lap, there would be no angular advance, as shown in the valve circle in Fig. 1, and the angle of admission would be 180 degrees, or full stroke. On the other hand, if the lap equaled 50 per cent. of the valve travel, the sine of the angular advance becomes 1, and the angular advance is 90 degrees, which multiplied by two equals 180 degrees, and there would be no angle of admission, as 180 — 180 = 0; and steam would be cut off at the beginning of stroke, there being no lead. If lead were used, the angle of admission would be that due to the

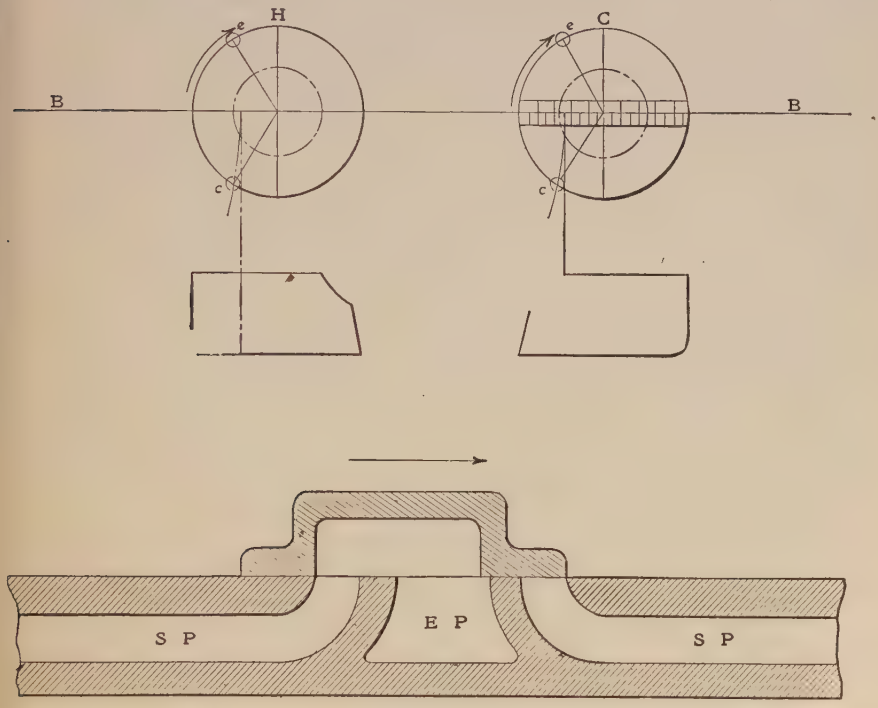


FIG. 10.

lead only. The above examples serve when the admission is greater than 50 per cent. of the stroke.

The *period of admission*, when less than 50 per cent. of the stroke, is equal to one half the versed sine of the angle of admission, as *A B*, Fig. 15. If the cut-off occurs beyond the half stroke, the period of admission equals one half the stroke plus one half the sine of the angle exceeding 90 degrees, as *H C K*, Fig. 16.

### Example

The lap equals 40 per cent. of the valve travel. This equals $40 \times 2 = 0.80$ radius. The angular advance therefore is the angle corresponding to a sine 0.80. The angle is 53 degrees 15 minutes; the angle of admission, therefore, is 180 degrees — (53 degrees 15 minutes $\times$ 2) = 73 degrees 30 minutes, which is less than one-quarter revolution or one-half stroke. The period of admission is actually one half the versed sine of 73 degrees 30

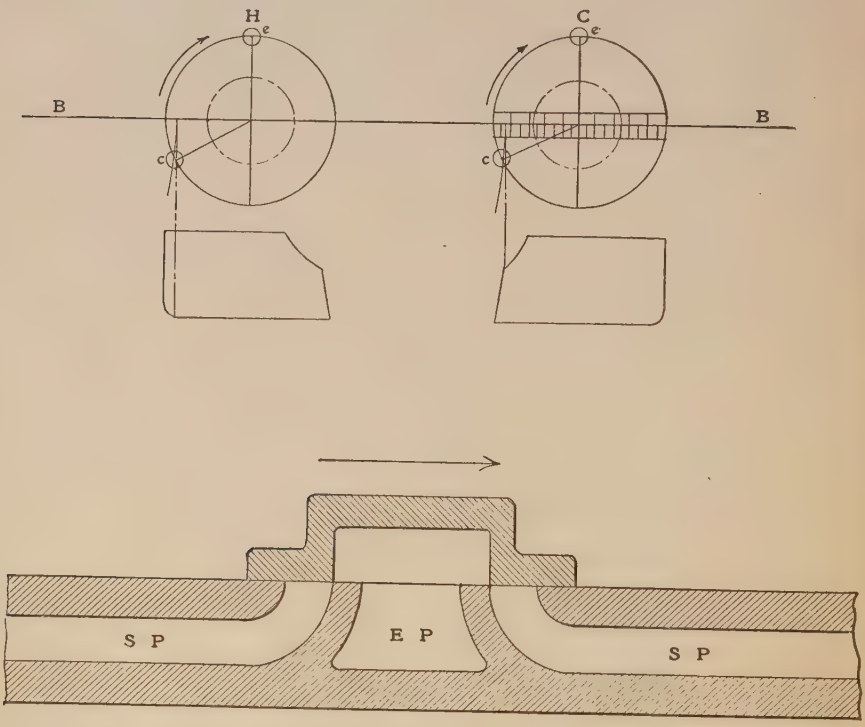


FIG. 11.

minutes, which is equal to 47.9 per cent. of stroke. Refer again to Fig. 15, in which $K\,C\,A$ is the *angle of admission*, either angle $L\,C\,D$, $K\,C\,L$, or $A\,C\,P$ being the *angular advance*, and $R\,P$ the *linear advance* equaling the lap.

If the lap were 30 per cent. of the valve travel, the *angular advance* would be $30 \times 2 = 0.60 = 37$ degrees, and the *angle of admission* would be 180 — (37 $\times$ 2) = 106 degrees, and the *period of admission* would be one half the versed sine of 90 degrees plus one half the sine of 16 degrees, or 63 per cent. of the stroke.

### The Exhaust

Assuming no exhaust lap, the opening and closing will occur when a portion of the stroke equaling one half the versed sine of the angular advance is still incompleted. That is to say, the angle of compression and the angle of prelease are equal to each other and equal also to the angle of advance. It follows that if the lap is 50 per cent. of valve travel, the angular advance would be 90 degrees, with the exhaust opening and closing at 50 per cent. of the stroke. On the other hand, if there were no steam lap nor lead, there would be no angular advance, and the exhaust would open and close at the end of the stroke.

### Angularity of the Connecting Rod

The angularity of the connecting rod with the center line lengthens the admission on the head end and shortens it on the crank end, as has

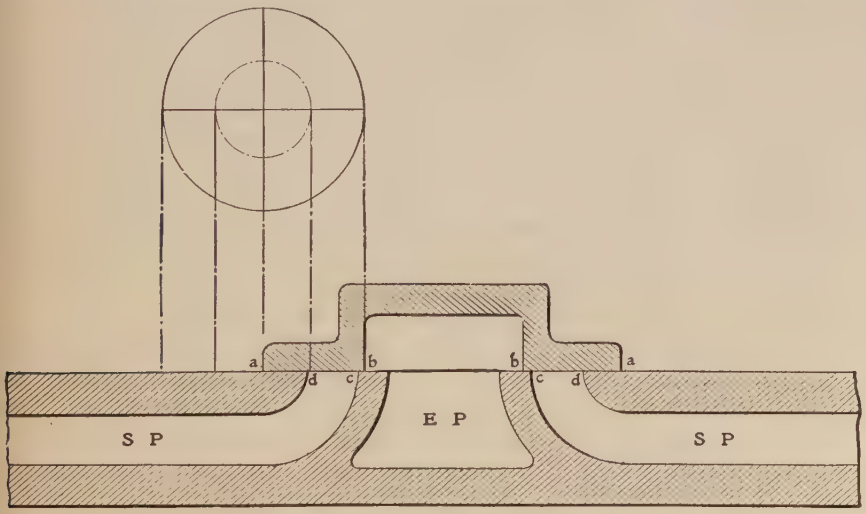


FIG. 12.

been shown in Figs. 4 to 11, inclusive, and summed up at the end and further explained here. The amount the cut-off is retarded during the out stroke and hastened during the in stroke depends upon the ratio of the length of the rod to the crank travel. In the examples already given, the ratio of rod to travel was 3 to 1. The point of cut-off also depends on the position of the crank at the time cut-off occurs. The amount the admission is lengthened on the out stroke (or the down stroke of a

vertical engine), and shortened on the in stroke (or the up stroke of a vertical engine), by the angularity of the connecting rod, *is the versed sine of the angle of the rod multiplied by the ratio of the crank divided by two.*

The angle of the rod may be found by dividing the sine of the crank

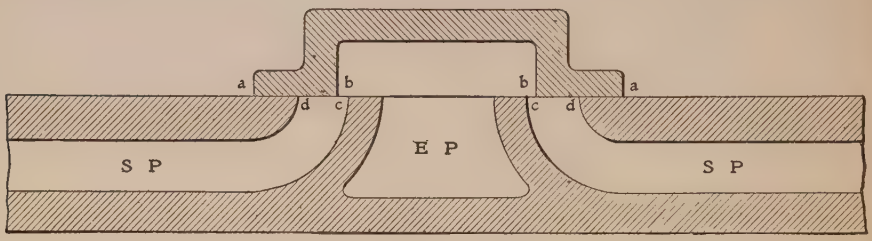


FIG. 13.

angle by the ratio of the rod to the crank. The quotient is the sine of the angle of the rod.

### Example

Assume the crank angle to be 60 degrees. The sine of 60 degrees = 0.866. This sine divided by the ratio of the rod to the crank (say 6) = 0.144, which is the sine of the connecting rod, and the angle is 8 degrees, nearly. Again, the reversed sine of 8 degrees = 0.00973. This multiplied by 6 ÷ 2 = 2 per cent., nearly, which is the amount the admission is lengthened on the out stroke and shortened on the in stroke. The exhaust is affected in the same way, only as the crank angles are smaller at exhaust, the full effect is not so great, as is shown by table of results of valve movements. The nearer to the one-half stroke of the crank the cut-off or release and compression occur, the greater the amount of difference in per cent. on the two strokes, and the nearer the beginning and end of the stroke the less the percentage.

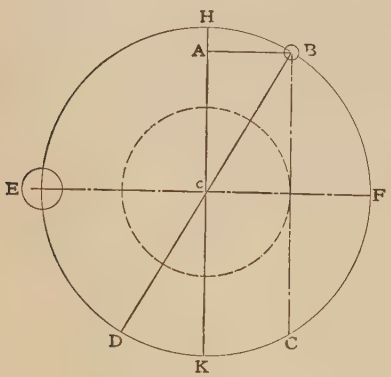


FIG. 14.

It has been shown that the pre-exhaust angle equals the angular advance (when no inside lap is used). Therefore, the sine of the angle of the connecting rod at exhaust is the sine of that angular advance of the eccentric which equals the lap and lead.

### Example

Assume the lap to be 30 per cent. of the valve travel or 0.60 radius. The lap being the sine of the angular advance, it will be 6 times the sine of the connnecting-rod angle, $0.60 \div 6 = 0.10$. which is the sine of the latter, and the angle is 5 degrees 45 minutes.

The reversed sine of 5 degrees 45 minutes is 0.005. The point of exhaust, therefore, would be delayed $0.005 \times (6 \div 2) = 0.015$ per cent. of

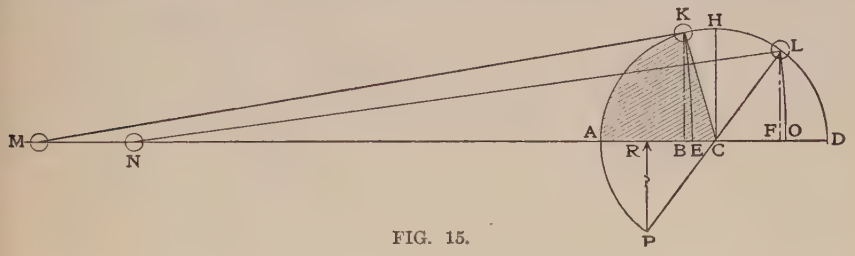


FIG. 15.

the out or down stroke, and hastened the same per cent. on the in or up stroke.

To correct for the angularity of the rod, it is customary to give less lead at the head end than at the crank end. It may be done also in the arrangement of the valve gear where rockers are used, placing the rocker arms in such position as to give the valve more rapid opening and closing movements on the head end than on the crank end. Professor Sweet provides for equal cut-off in this manner. Similar construction has been used by Mr. Williams and other designers.

Providing greater lead at the crank end than at the head end not only serves to correct the admission but the exhaust also, only it is not sufficient

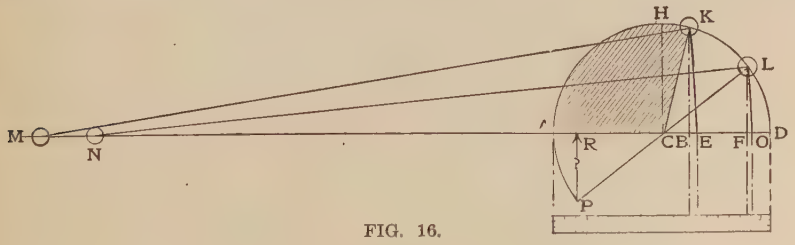


FIG. 16.

for the latter. To equalize the compression, therefore, it is customary to use less inside exhaust lap at the head end than at the crank end. Or, the crank end may be made line and line if the cylinder clearance is small, and the lap at the head end is cut away so as to give negative lap at that end

when the valve is centrally located. About from 1 to 3 per cent. is generally sufficient, the object being to reduce the terminal compression at both ends to about three fourths of initial compression.

When the rods are very short, as in marine engines (sometimes of as low as 1.7 ratio), it is quite, or almost, impossible to equalize the cut-off with a single valve, and also very little loss occurs from a moderate degree of inequality.

## Method of Laying Out Valve Motion

In Figs. 15 and 16 is shown a method of laying out the valve motion used by E. F. Williams, designing engineer, which recommends itself on account of its simplicity. The lines $M\,D$ are drawn to represent the center line of the engine indefinite. From $C$ as a center, draw the circumference $P\,A\,K\,H\,L\,D$, representing both the travel of the crank pin and that of the eccentric. Draw the vertical downward from the center line a distance equaling the lap and lead, meeting the travel circle at $P$. Draw the diameter $P\,L$ and erect the perpendicular $L\,F$. The distance $A\,F$ is the travel of piston prior to release, and the distance $F\,D$ is the pre-release. Make the angle $K\,C\,D$ equal to twice the angular advance $L\,C\,D$; the remaining angle $K\,C\,A$ (shaded) is the angle of admission, and the period of admission is $A\,B$, the connecting rod being considered infinite.

To correct for the angle of the rod, draw the line $M\,K$ for the steam admission, and the line $N\,L$ for the exhaust, making the ratio of $M\,K$ to $K\,C$ and $N\,L$ to $L\,C$ equal to the ratio of the connecting rod to the crank. From the points $M$ and $N$ scribe the arcs $K\,E$ and $L\,O$.

The point $E$ will be the point of cut-off and $G$ the point of release, corrected for the angles of the connecting rod.

## II

## A STUDY OF THE D SLIDE VALVE*

It will now be in order to take up more in detail the effects of changing the valve setting, and the methods of using the diagram for designing and proportioning valves for new engines or for remodeling valves in engines already in operation. It will be seen in Fig. 17 that if the outside lap is increased an amount corresponding to $N$—$M$ on the scale of the diagram, admission will take place later, at the crank position $O$—$A'$, where the lead will be reduced to $I$—$G$, and cut-off will take place earlier at $O$—$C''$. On the other hand, the contrary effects are seen where the outside lap is reduced, and if the inside lap be increased an amount equal to $L$—$S$ release will take place later, or at the crank posi-

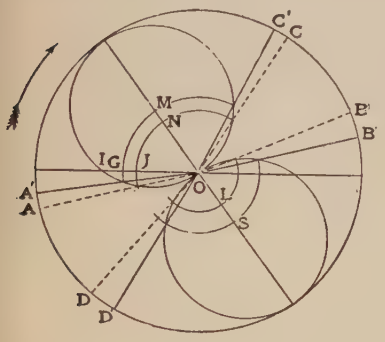


FIG. 17.

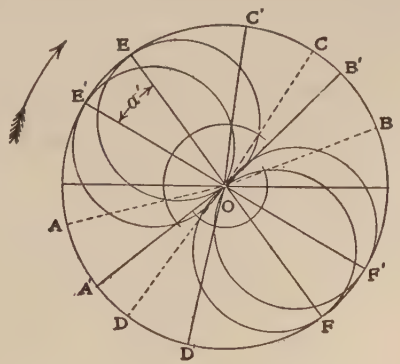


FIG. 18

tion $O$—$B'$, and compression will take place earlier, at $O$—$D'$, the effect being exactly opposite for a decrease of the inside lap.

In Fig. 18 is shown the effect of altering the angular advance of the eccentric. It will be seen that if the angle of advance is increased, as at $a'$, all the events of the valve occur earlier, since the crank revolves in the direction indicated by the arrow, and the new position of admission $O$—$A'$ is ahead of $O$—$A$, the old position. This is true also of the other valve movements, $O$—$E'$ being ahead of $O$—$E$, and $O$—$C'$ ahead of $O$—$C$.

* Contributed to Power by E. S. Hawkins.

A third alteration that may be made in the valve gear is a change of eccentricity, by altering the eccentric radius, when making a design, or by using a new eccentric of radius different from that of the older one, where an engine is being rebuilt. The effect of a change in eccentricity is shown in Fig. 19, in which it will be noted that when the eccentricity is increased, the valve travel is increased, and admission takes place earlier (at $O$—$A$), the lead being increased an amount equal to $I$—$I'$, while cut-off takes place later (at $O$—$C'$); $O$—$B'$ in the figure comes ahead of $O$—$B$, showing that release is earlier the greater the eccentricity and, since $O$—$D'$ comes after $O$—$D$, it is plain that compression is later. Since the upper valve circle cuts the arc drawn from $O$ as the center, with a radius equal to the outside lap plus the width of the steam port, in the points $W'$ and $H'$, the admission port will be open wide, while the crank moves from $O$—$W'$ to $O$—$H'$. On the lower valve circle it is shown that the exhaust port opens sooner (at $W$) and remains open longer (at $H$). It is plain, of course, that decrease of the eccentricity will have a contrary effect.

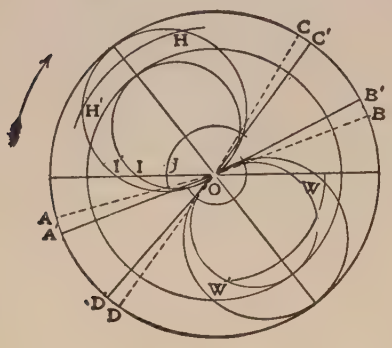


FIG. 19.

TABLE SHOWING IN CONDENSED FORM EFFECT OF CHANGES IN LAP, TRAVEL OF VALVE, OR ANGULAR ADVANCE OF ECCENTRIC

| | Increasing Outside Lap | Increasing Inside Lap | Increasing Travel | Increasing Angular Advance |
|---|---|---|---|---|
| Admission..... | Is later | Not changed | Begins earlier | Begins earlier |
| | Ceases sooner | | Continues longer | Same period |
| Expansion..... | Is earlier | Beginning unchanged | Begins later | Begins earlier |
| | Continues longer | Continues longer | Ceases sooner | Same period |
| Exhaust..... | Unchanged | Occurs later | Begins earlier | Begins earlier |
| | | Ceases sooner | Ceases later | Same period |
| Compression.... | Begins at same point | Begins sooner | Begins later | Begins earlier |
| | | Continues longer | Ceases sooner | Same period |

The accompanying table shows in condensed form the effect of changes in the lap, travel of the valve, or the angular advance of the eccentric.

From what has been said, it will be seen that in all problems using the valve diagram, there are, in addition to the four valve movements of admission, cut-off, release, and compression, the other variables of valve travel, angle of lead, outside lap, and inside lap. In every problem, some of these items are given and the others must be found and, in designing an engine, the conditions under which it is to be used determine certain of the elements which are then considered fixed, and are used in computations to determine the other variables. In general, the work of any case will fall under one of five problems, each of which will be here explained.

Problem I. Given the travel of valve and points of admission, cut-off, and release.

In Fig. 20, let $C$—$P_3$ equal the given travel of the valve, and on this line as a diameter construct a circle, marking on it the points $K$, $P$, and $P_2$ for the given points of admission, cut-off, and release. Through $K$ and $P$ draw the line $K$—$P$, and through $O$ draw the line $C_3$—$C_4$ perpendicular to the line $K$—$P$. From $P_2$ draw the line $P_2$—$K_1$ parallel to $K$—$P$, and intersecting the line $C_3$—$C_4$ at the point $M_1$, the distance of which from the center $O$ is the exhaust lap of the valve, while the similar distance of the point $M$ on the line $K$—$P$ from the center $O$ is the lap of the steam valve. By drawing in the valve circles and the lap circles through the points $M$ and $M_1$, the leads $N$—$Q$ and $N_1$—$Q_1$ are determined.

Problem II. Given the travel of valve, steam lap, steam lead, and any point in the exhaust diagram.

In this case the crank circle is constructed as before, and the distance $O$—$N$ laid off equal to the lap plus the lead. At the point $N$ the perpendicular $N$—$C_3$ is erected, cutting the crank circle in the point $C_3$. It is plain then that the angle $C_3$—$O$—$R$ is the angle of advance and the diagram is completed by drawing the diameter $C_3$—$O$—$C_4$, and following out the construction by drawing in the valve and lap circles.

Problem III. Given the travel of valve, cut-off, steam lead, and exhaust lap.

First construct the valve circle as before and mark on it the point $P$ corresponding to the point of cut-off. With the point $C$ as a center and a radius equal to the lead (which is given), draw in a circle, as shown in the figure, and from the point $P$ draw a line passing tangent to this circle on the under side. This line will cut the large circle at the point $K$, which is the point of admission. By drawing a diameter through the point $O$ perpendicular to the line $K$—$P$ the angle of advance is determined, after which the rest of the construction can readily be carried out.

Problem IV. Given the steam lap, steam lead, and the point of cut-off.

In Fig. 20, let the angle $C$—$O$—$P$ be that corresponding to the point of cut-off and draw in the lap circle $Q\,M\,L$, laying off at the same time the distance $Q$—$N$ equal to the lead. Connect the points $N$ and $O$ and the points $O$ and $L$ by straight lines, and erect a perpendicular to each of these lines at its middle point. The point $O_1$ at which these two perpendiculars intersect will be the center of the steam-valve circle and the radius will be the distance from it to the point $O$, or either of the points $N$ and $L$. The diameter of this circle is, of course, equal to one half the travel of the valve, so that the crank circle may readily be constructed, and the angle $C_3$—$O$—$R$ between the diameter of the valve circle and the perpendicular erected from the point $O$ will be the angle of advance. It is, then, an easy matter to carry out the construction and

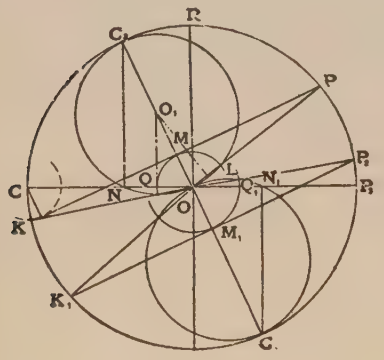


FIG. 20.

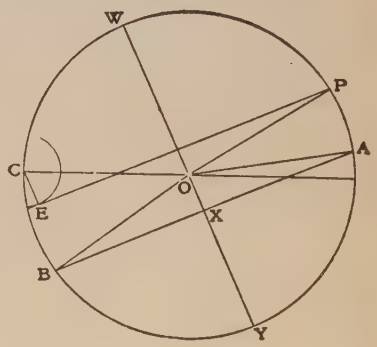


FIG. 21.

finish the diagram by drawing in the other valve circle and the two lap circles, and laying off on the crank circle the points corresponding to the other valve movements.

Problem V. Given the cut-off, release, compression, and width of port.

It is assumed that the width of the port is equal to the maximum opening of the exhaust port, and to construct the diagram it will first be necessary to find the travel of the valve, which is done, as shown in Fig. 21, by drawing a circle of indefinite radius and marking on it points of cut-off, release, and compression. This can readily be done, since these points, if given in terms of the stroke, as explained in Chapter III, may be found in terms of the angle turned through by the crank. Join the points of release and compression by the line $A$—$B$ and through $O$ draw a diameter perpendicular to this line. It is then plain that the ratio of valve travel to the given width of port is equal to the ratio of $W$—$Y$ to $X$—$Y$; and from this the travel of the valve is obtained and used as the diameter of a new crank circle, which, when drawn, has the

points of cut-off, release, and compression laid down and the diagram drawn as per the problem already given.

Sometimes the point of release is given instead of the width of port, and in this case the travel of valve is found by drawing through the point P a line parallel to *A*—*B* and from the point *C* dropping a perpendicular to this line at *E*. The line *C*—*E* is then proportional to the lead, so that we have the ratio travel of valve to given lead equals *W*—*Y* to *C*—*E*, from which the travel of valve is found as before. In these cases the distance *W*—*Y* is multiplied by the width of port or by the given lead, as the case may be, and the product divided by the distance *X*—*Y* or *C*—*E*, to find the travel of the valve in actual inches. This dimension must, of course, be altered to correspond with the scale selected for drawing the diagram.

As illustrations of the practical working of the diagram a number of examples with solutions will be given.

1. Travel of the valve is 6 ins. and cut-off occurs when the crank has completed 105 degrees of its path. Admission of steam begins when the crank is within 7.5 degrees of the beginning of its stroke, and exhaust closes when it is 60 degrees from the end of its stroke. Construct the Zeuner's valve diagram and find the steam lap, steam lead, exhaust lap, exhaust lead, and the angle of advance.

As the first step, select some scale to which the diagram is to be drawn and, as in this case the travel is 6 ins., one half this length may conveniently be used for the diameter of the crank circle, which is drawn as shown in Fig. 22. On this circle, the given points of admission, cut-off, and compression are laid down at *K*, *P*, and $P_4$, respectively, making the arcs *C*—*K*, *C*—*P*, and *C*—$P_4$ equal, respectively, to the given angles of 7.5, 105, and 60 degrees. A line is then drawn connecting the points *K* and *P*, and, through the center *O* of the circle, a diameter is drawn perpendicular to this line, intersecting the crank circle in the points *A* and *B* and the line *K*—*P* at *M*. By measurement, the angle *A*—*O*—*A'* is found to be 42.5 degrees and this is the angle of advance required to be found. With the lines *O*—*A* and *O*—*B* as diameters, valve circles are drawn in and, with *O* as the center and *O*—*M* as the radius, the steam-lap circle is drawn, *O*—*M* being one half the steam lap, which by measurement is found to be $\frac{13}{16}$ of an inch. The distance *N*—*Q* between the intersections of the valve and the lap circles with the line *O*—*C* is found to be $\frac{3}{16}$ of an inch, and this is one half the steam lead.

To find the exhaust lap and lead, draw from the point $P_4$ a line perpendicular to the diameter *A*—*B*, and intersecting this diameter at the point *M'*, the distance of which from the center *O* of the crank circle is the exhaust lap, so that the circle described with *O* as its center and the distance *O*—*M'* as a radius is the exhaust-lap circle and the distance

$Q'$—$N'$ between its intersection with the line $O$—$P_3$ and that of the exhaust-valve circle is found to be $\frac{9}{16}$ of an inch, which is one half the exhaust lead of the valve; $O$—$M'$ is $\frac{7}{16}$ in., so that the exhaust lap is $\frac{7}{8}$ of an inch.

2. A valve has a travel of 5 ins., a steam lap of 1 in., an exhaust lap of $\frac{1}{2}$ in., and a steam lead of $\frac{1}{2}$ in. It is required to find the angle of advance and the point of cut-off. The stroke of the engine is 4 ft. and the connecting rod is considered to be of infinite length, so that its

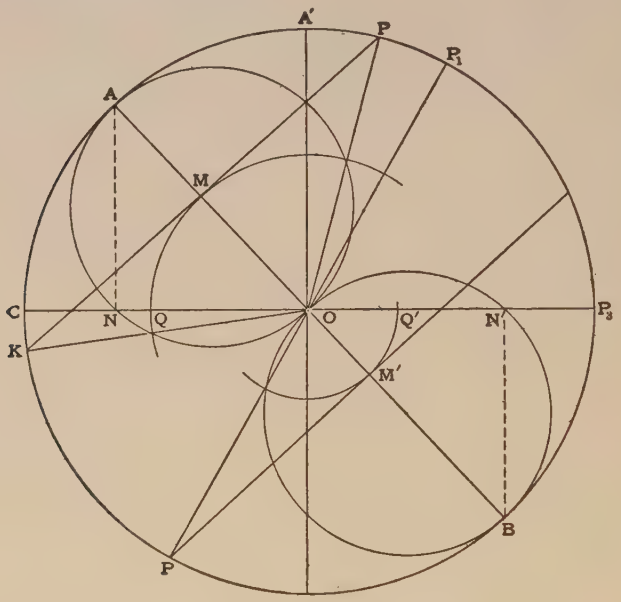


FIG. 22.

angularity may be disregarded. It is also required to determine what should be the steam lap of the valve if steam is to be cut off at half stroke; what should be the angle of advance to make the engine cut off at half stroke, and how this change would affect the other functions of the valve.

Here the travel of the valve is 5 ins., and one half of this may be taken as the diameter of the crank circle, which is shown in Fig. 23 with the two diameters $C$—$P_3$ and $C'$—$D$ at right angles. $O$—$M$—$O$ as the center and the radius $O$—$M$ equal to one half of the given steam lap of 1 in., the steam-lap circle $Q\,M\,L$ is drawn in, and with a radius of $\frac{1}{4}$ of an inch the lap circle for the exhaust valve is also drawn. From the point $Q$, where the steam-lap circle intersects the horizontal diameter $C$—$P_3$, the distance $Q$—$N$, equal to $\frac{1}{4}$ of an inch, or one half the given steam lead, is laid off and, from the point $N$, a perpendicular is erected

on the diameter $C—P_3$, intersecting the crank circle at the point $A$, from which the diameter $A—O—B$ is drawn.

The angle $A—O—C'$ is the angle of advance and by measurement is found to be 37 degrees. Since the connecting-rod length is considered infinite, the distance of the piston from the end of its stroke at cut-off will be equal to the distance $N'—P_3$ from the foot of the perpendicular dropped on the diameter $C—P_3$ from the point of cut-off $P$. By measurement this distance is found to be $\frac{5}{8}$ of an inch, and since the scale of the diagram is $2\frac{1}{2}$ ins. equal to the stroke of 4 ft., the distance of $\frac{5}{8}$ of an inch will be exactly one-fourth stroke, so that this is the point of cut-off. This point is found on the diagram by drawing the line $K—P$

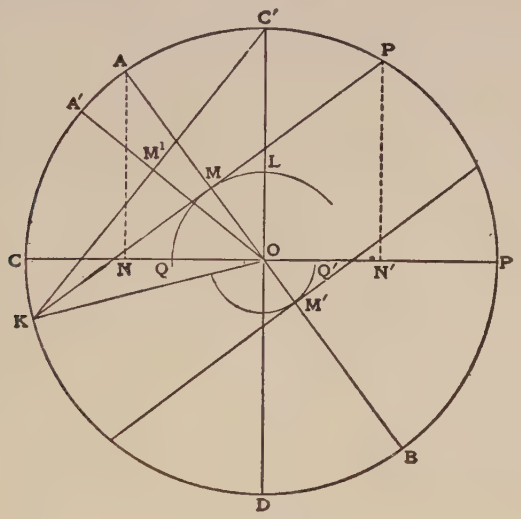


FIG. 23.

through the intersection of the steam-lap circle with the diameter $A—B$ at the point $M$, making the line $K—P$ perpendicular to $A—B$. In this way, also, the admission point $K$ is found.

To find the amount of lap that would be required to make the cut-off come at half stroke, assume the cut-off to be at this point, or at the line $O—C'$ in the figure, and from $C'$ draw a line to the point of admission at $K$; $O—A'$ is then drawn perpendicular to $K—C'$, and the distance $O—M_1$, which by measurement is found to be $\frac{3}{4}$ of an inch, is one half the steam lap that would be required to bring cut-off at half stroke. With this condition, the angle of advance will be $A'—O—C'$, which by measurement is found to be 51 degrees. This greater angle of advance would make the other movements of the valve come earlier in the stroke.

3. A valve such as shown in Fig. 24 is to have a travel just sufficient

to open the port wide for exhaust, when the exhaust is a maximum, and with a connecting rod considered of infinite length it is to cut off at three fourths of the stroke. The exhaust port is to begin opening when the piston is at one eighth of its stroke from the end and admission occurs at one sixteenth of the stroke. It is required to find the steam and exhaust laps, the travel of the valve, the angle of advance of the eccentric, and the position of the piston at exhaust closure.

To solve this problem draw a circle, as in Fig. 25, making the diameter of any convenient length, which in this case is taken as 3 ins., and draw also the diameters $C$—$P_3$ and $A'$—$B'$ at right angles. On the diameter $C$—$P_3$ the distance $C$—$Q$ is $2\frac{1}{4}$ ins., or three quarters of the diameter. At this point erect a perpendicular to the diameter, intersecting the circle at the point $P$, which will be the point of cut-off. In a similar way the point $Q'$ is located, so that its distance from the point $P_3$ is $\frac{3}{8}$ of an inch, or one-eighth stroke from the outer dead center $P_3$, and the perpendicular erected from this point $Q'$ intersecting the circle at the point $P'$ locates the point of release. In a similar way the point $N$ is found one eighth of the stroke, or $\frac{3}{16}$ of an inch from the point $C$ and the perpendicular dropped to the circle, intersecting it at $K$, the point of admission.

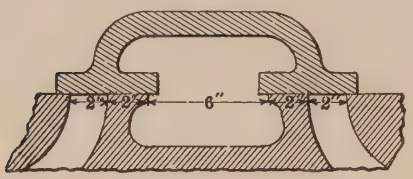

FIG. 24.

By connecting the points $K$ and $P$ with line $K$—$M$—$P$ and drawing a diameter through the center $O$ perpendicular to this line, the angle of advance $A$—$O$—$A'$ is located and this is found to be 44 degrees. To find the point of exhaust closure or compression, draw from $P'$ a line perpendicular to the diameter $A$—$B$ and intersecting the crank circle at the point $K'$, which will be the point of compression. By drawing from this point a line perpendicular to the diameter $C$—$P_3$ and intersecting it at the point $N'$, which is $\frac{1}{2}$ in. from $C$, it is seen that compression takes place when the piston is one sixth of its return stroke from the inner dead center $C$. Fig. 24 shows that the width of the port is 2 ins., and this, therefore, is the maximum opening to exhaust, so that, according to the conditions given in Problem V, the travel of the valve ÷ given width of port = $A$—$B$ ÷ $M'$—$B$, Fig. 25. The width of the port is 2 ins., as just stated, so that the travel of the valve is equal to $2 \times 1\frac{1}{2} \div M'$—$B$, which is found by measurement to be $1\frac{3}{32}$ ins. This gives the valve travel as 2.13 ins. (4.26 ins. actual, as the diagram is half scale), so that all linear dimensions taken from the diagram as drawn in Fig. 25 must be reduced in the ratio of 2.13 to 3. Reducing the distance $O$—$M$, which measures $\frac{3}{8}$ of an inch by this ratio, we find that the actual steam lap is

0.532 in.; and the exhaust lap $O$—$M'$, reduced in a similar way from its actual measurement of $\frac{3}{32}$ of an inch, gives the actual amount of lap as 0.133 in.

4. In a given engine, cut-off is to take place when the crank is 45 degrees from the end of its stroke, release being at 15 degrees from the end of the stroke and admission at 7.5 degrees from the beginning of the stroke. The maximum exhaust port opening is 2.5 ins. and it is

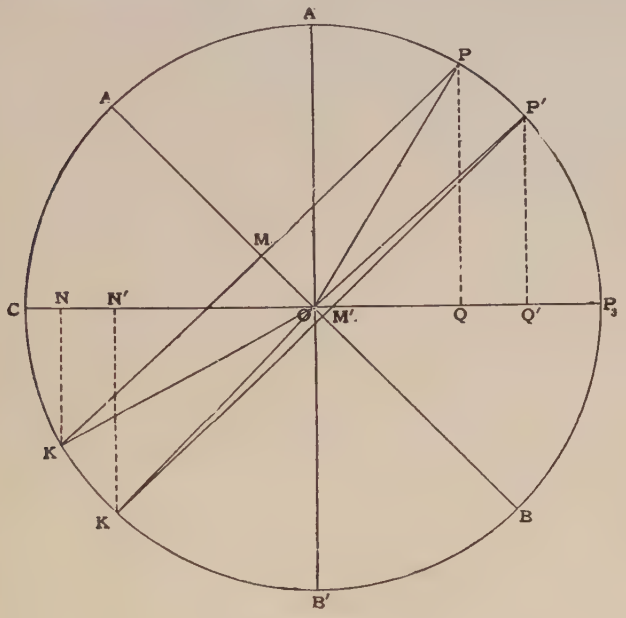


FIG. 25.

required to find the travel of the valve, the steam and exhaust laps, the crank angle when compression begins and the exhaust lead.

Again making the diagram one half full size, draw the two lines $C$—$P_3$ and $A'$—$B'$ perpendicular to each other, as in Fig. 26, and from their point of intersection $O$ draw the line $O$—$K$, making an angle of 7.5 degrees with $O$—$C$, also the line $O$—$P$, making an angle of 45 degrees with $O$—$P_3$ and the line $O$—$P_1$, making an angle of 15 degrees with $O$—$P_3$. We then lay off from the point $O$ on the lines $O$—$K$ and $O$—$P$ equal distances, $1\frac{1}{2}$ ins., as shown in the figure, and connect the points $K$ and $P$ thus found. Through the point $O$ the line $A$—$B$ is drawn perpendicular to the line $K$—$P$ and from the point $P'$, which is also $1\frac{1}{2}$ ins. distant from $O$, the line $P'$—$K_2$ is drawn parallel to $K$—$P$, so that it is also perpendicular to the line $A$—$B$. From its point of intersection $M'$ with the line A—B, lay off the distance $1\frac{1}{4}$ ins. to

the point $B$. With $O$ as the center, and with $O$—$B$ as a radius, draw the circle as shown. This will be the crank circle and its diameter $C$—$P_3$ the travel of the valve, which by measurement is found to be 3 ins. (6 ins. actual) while the distance $O$—$M$, or the steam lap, is by measurement found to be $\frac{1}{2}$ in. (1 in. actual) and the exhaust lap $O$—$M'$, $\frac{1}{4}$ of an inch ($\frac{1}{2}$ in. actual), the crank angle at compression $C$—$O$—$K_2$, 36 degrees, and the steam lead $N$—$Q$, $\frac{1}{4}$ in. on the diagram or 0.5 in.

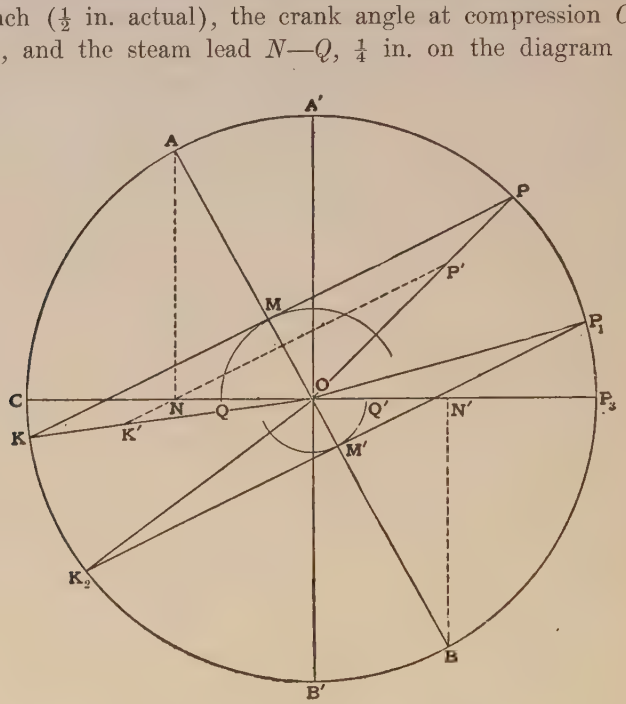


FIG. 26.

actual, while the exhaust lead $N'$—$Q'$ is $\frac{3}{32}$ of an inch on the diagram or $\frac{3}{16}$ actual.

It so happens in this case that the distance selected to lay off on the lines $O$—$P$ and $O$—$K$ was $1\frac{1}{2}$ ins., or one half the valve travel, but this is not necessarily the case, as the solution will be unaffected no matter what distance is laid off. Thus, for instance, if we should lay off 1 in. on $O$—$P$ and $O$—$K$ to the points $K'$ and $P'$ and join these points by a line as shown, we would still be able to draw the line $A$—$B$ perpendicular to the dotted line so that its angle with the vertical $A'$—$B'$ would be the same as at first. All of the linear dimensions of the diagram are determined by the maximum opening to exhaust, $2\frac{1}{2}$ ins., which is laid off from the point $M'$ to $B$, as already described, for determining the radius for the crank circle.

## III

## A STUDY OF THE ZEUNER SLIDE-VALVE DIAGRAM*

PROBABLY every engineer at some time or other has had a nice job of valve setting on his hands. In fact, it is quite common to hear an engineer begin a conversation with some such remark as this: "Well, the worst job I ever had was to set the valves on an old high-speed engine with a riding cut-off valve." In another case it may be an experience in setting the valves of a double-eccentric Corliss, or, perhaps, in still a third case it was a tandem or cross compound engine. Wherever one goes, he is sure to meet an engineer who is on the lookout for a patent-medicine cure-all that will be a sure preventer of the troubles met in setting valves. Perhaps this may not appear unusual when one considers the fact that on the proper or improper setting of the valves may depend the balance of profit or loss when it comes to the final reckoning at the end of the year.

For those who have mastered the principles of valve operation, the work of setting the valves is simple, but to a large number of engineers the functions of the valve seem to be hidden behind the valve-chest cover. Even with the cover removed and the valve parts in plain sight, it is not always clear as to just what changes are necessary to obtain a desired result. In some cases it is possible to tell at a glance where the trouble lies, but in others one must make a careful study of the case, considering the movements of the valve in their relation to the engine piston.

The making of this analysis is not an easy matter for those unfamiliar with mathematical problems, and, although many men can by a few figures or rule-of-thumb methods determine what the valve conditions should be, there are others for whom the task is not so simple. To these men, objects, lines, and dimensions that are visible to the eye make the subject much clearer than could be done by the mazes of mathematics only suitable for exploration by the logically trained analyst. It is, therefore, with a view to meeting the needs of the practical man, to whom the chalk sketch tells everything, that this article is written.

Several methods of graphically solving slide-valve problems have been worked out, but Zeuner's diagram is, perhaps, the most useful and simple

* Contributed to POWER by E. S. Hawkins.

of all and will, therefore, be considered in detail. By means of the diagram, the effect on the steam supply of changes in the dimensions of the valve, or in the adjustment of the eccentric, etc., are made actually visible.

It is assumed that the length of the eccentric rod is infinite or, in other words, that it moves in a line parallel to the piston rod. This assumption can safely be made, since the angle due to the eccentric radius is so small as to have no appreciable effect on the results. Given the points at which admission, cut-off, etc., take place, the diagram shows the relative crank position. Conversely, the position of the valve corresponding to a given crank position may be found readily. By the use of the valve diagram in connection with the indicator, it is possible to diagnose a case of valve trouble so as to know the dimensions of the valve and the way in which it performs its functions as accurately and certainly as if it were seen operating within a transparent chest.

For the sake of clearness, let it be supposed first, that the valve has no lap and that the line $O$—$Q$, as in Fig. 27, represents the eccentric radius, so that the eccentric travels in the large circle as indicated by the arrow. When it is at $Q$, the valve is closed, but as it moves around the circle the valve gradually opens until, when the eccentric is at the point $H$, the amount of opening is represented, to the scale of the diagram, by the distance $O$—$G$. It will be noted here that the crank positions are not shown, but for any given position of the eccentric in its circle, the corresponding position of the crank will be behind the eccentric position by 90 degrees plus the angle of advance.

Since it is desirable to avoid the necessity of dropping perpendiculars to the line of valve travel, such as $H$—$G$ in Fig. 27, it becomes necessary to construct a line each point of which is distant from the center $O$ by an amount equal to the valve travel corresponding to the eccentric position indicated by a line passing from $O$ through the given point. To do this, take the point $O$ as a center and, with $O$—$G$ as a radius, draw the arc $G$—$L$ until it intersects the line $O$—$H$. Then at the position $H'$ of the eccentric, drop the perpendicular $H'$—$G'$ to the line $X$—$O$—$Y$ and, with $O$—$G'$ as a radius, draw another arc intersecting the line $O$—$H'$. By continuing this process, a number may be found each of which marks off on the line of eccentric position a distance from the point $O$ equal to the valve travel for the given position of the eccentric. Upon joining the points, such as $L$ and $L'$, a closed curve is formed known as the valve circle.

To prove that the curve is a circle, take the triangles $O$—$L$—$Y$—$O$ and $O$—$G$—$H$—$O$, as in Fig. 27, in which $O$—$Y$ equals $O$—$H$ and $O$—$G$ equals $O$—$L$, while the angle $L$—$O$—$Y$ is common to both triangles. Since the two triangles have two sides and an included angle equal the one to the other, they can be placed in coincidence and are, therefore, equal the one to the other, so that the line $H$—$G$ equals the line $L$—$Y$.

and the angle *O*—*L*—*Y*, being the same as angle *O*—*G*—*H*, is a right angle. The right angle *O*—*L*—*Y* being inscribed in the closed curve and on its diameter *O*—*Y*, gives proof that the curve is a circle.

Perhaps it may be thought that the proof of the valve circle is long and unnecessary, but it is important to establish this fact since, after having done so, the circle can be drawn in on the eccentric radius as a diameter without plotting the points as at *L*. Thus the diagram is simplified and the work shortened. By reasoning similar to what has been given, the valve circle for the right-hand end of the valve can be drawn in at the left of the figure, as in Fig. 27; and, since the valve is supposed to have no laps, the two valve circles will be identical,

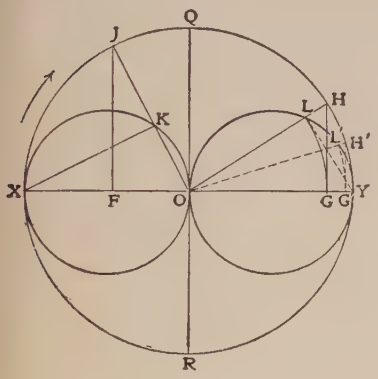


FIG. 27.

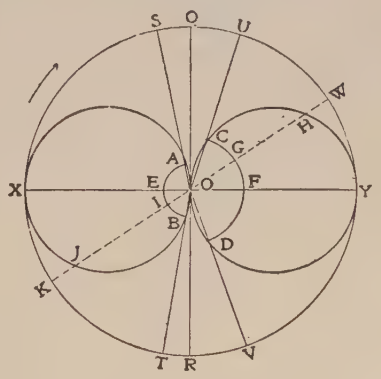


FIG. 28.

that at the right of the figure representing the opening of the valve for the admission of steam at the left while, at the same time, the circle at the left of the figure represents the opening of the valve at the right hand for the escape of the exhaust steam. On the reverse stroke of the piston, what was before the circle for steam admission is that for exhaust and *vice versa*. Thus in Fig. 27, for the eccentric position *J*, the valve will be open for the admission of steam at the right-hand end by the distance *O*—*K*.

In practice, it is not possible to have a valve with no lap, because if such a valve were constructed it could not be closed tight enough to prevent the escape of steam past the edge of the port; nor could the periods of admission and exhaust be regulated to secure the highest economy. Having, therefore, drawn in the valve circle in Fig. 28 by the process already described, it will be necessary to take account of the lap on the two sides of the valve, by drawing in the arcs *C*—*D* and *A*—*B* with centers at the point *O*. The distance *O*—*C* represents, to the scale taken, the amount of the steam or outside lap of the valve, while the distance

$O$—$A$ represents the inside or exhaust lap. When, therefore, the eccentric is at the position $W$, Fig. 28, the amount the valve has opened at the left for the admission of steam is represented by the distance $G$—$H$, or the sector $O$—$H$ less the length of the steam lap $O$—$G$ by which amount it is necessary for the valve to travel before the port opens. Similarly, the distance $I$—$J$ at the left of the diagram is the amount by which the valve is open for the exhaust of steam on the right-hand end for the same position $W$ of the eccentric.

Usually it is most convenient to refer all valve motions to the position of the crank, since it is easier to determine this position than that of the eccentric and, for this reason, it is now necessary to translate the eccentric positions, discussed in Figs. 27 and 28, to the corresponding crank positions. This is done in Fig. 29 by moving the diameter of the valve circles backward by an amount equal to 90 degrees plus the angle of advance.

Suppose that the crank is on the inner dead center, as at $C$ in Fig. 29, the corresponding position of the eccentric is at $P$ so that the angle $P$—$O$—$R$ is the angle of advance. This being the case, the distance $O$—$A$ represents the amount of valve travel from the mid position at the beginning of the stroke. As the crank revolves to the positions $C_1$, $C_2$, $E_3$, etc., the eccentric moves through equal angles to the corresponding positions $P_1$, $P_2$, $P_3$, etc., until, at this latter point, it has had its maximum effect on the motion of the valve which has now reached the full limit of travel to the right. At this time, the crank is evidently at the point $E_3$ so that the angle $R$—$O$—$E_3$ equals the angle $P$—$O$—$R$, or the angle of advance. The distances $O$—$A$, $O$—$A_1$, $O$—$A_2$, and $O$—$P_3$ represent the travel of the valve from its mid position for the various crank positions $C$, $C_1$, $C_2$, and $E_3$. By sweeping circles from the points $A$, $A_1$, $A_2$, etc., to the corresponding points $E$, $E_1$, $E_2$, etc., with $O$ as a center and connecting $E_3$ with any one of the points, such as $E_1$, we have a second method of proving the fact that the valve curve is a circle, for, as can readily be seen in the figure, the triangle $O$—$E_1$—$E_3$ is equal to the triangle $O$—$A_1$—$P_1$.

As may be inferred from what has already been said, the amount that the valve overlaps the edge of the port when in the mid position is called the "lap," the part on the outside of the valve being known as the steam or outside lap while that on the inside is the exhaust lap. Before the steam port can open, the valve must travel a distance equal to the amount of the lap and, after it has opened, the amount of opening is always equal to the amount of travel less the amount of lap. This fact has been shown diagrammatically in Fig. 28 and is also shown in Fig. 30, in which it will be seen that for the position $K$ the opening of the port is zero. This point, therefore, represents the crank position at

the instant the valve is ready to open or, in other words, the point of admission. It is evident from the diagram that at the point $P$ the opening of the valve is again zero, so that this point is the position of the crank when the valve closes and cuts off the steam supply.

When the crank is on the dead center, as at $C$ in Fig. 30, the valve is open by the amount of lead, which is represented in the diagram by the distance $N$—$Q$ on the line of dead centers. In a similar way, the amount that the valve is open to exhaust at the end of the stroke is known as the exhaust lead.

It is now necessary to show the proof of some of the more important properties of the diagram as shown in Fig. 30. By examining the figure it will be seen that a perpendicular let fall from the point $C_3$, where the

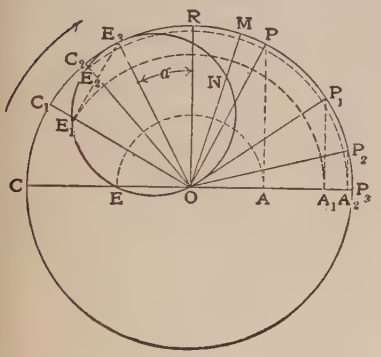


FIG. 29.

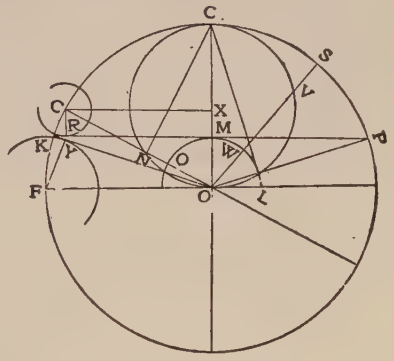


FIG. 30.

valve-circle diameter intersects the crank circle, cuts the line of dead centers at a point $N$ distant from the center $O$ by an amount equal to the lap plus the lead of the valve. To prove that the line joining the points of admission and cut-off is tangent to the steam-lap circle, take the triangles $C_3$—$O$—$L$ and $P$—$O$—$M$, of which the sides $O$—$P$ and $O$—$M$ are equal respectively to the sides $O$—$C_3$ and $O$—$L$, and the angle $C_3$—$O$—$P$ is common to both of the triangles. Hence they are equal and the angle $O$—$M$—$P$ equals the angle $O$—$L$—$C_3$, which is a right angle, thus proving that the line $P$—$M$—$K$ is tangent to the circular arc $Q$—$M$—$L$. From this proposition it follows that if a circle be drawn with the point $C$ as the center and a radius equal to the lead, this circle will be tangent to the line $K$—$P$, which joins the points of admission and cut-off. As a proof, the line $C$—$X$ is drawn from $C$ parallel to $K$—$P$, and therefore perpendicular to $C_3$—$O$, so that the lines $C$—$O$ and $C_3$—$O$ are equal, as are also the angles $O$—$C$—$X$ and $O$—$C_3$—$N$. Since the angle $C$—$O$—$C_3$ is common to both triangles, they are equal and $X$—$O$ $=$ $N$—$O$, while $X$—$M$ $=$ $N$—$Q$ $=$ the lead. Lines $C$—$X$ and $M$—$R$ are

parallel by construction, so that $C—R = X—M =$ the lead, and $C—R—M$ is a right angle with the circle tangent to the line $K—P$.

Another property that is useful in constructing the exhaust part of the diagram when the lap circle is so small that it does not give a sharp intersection with the valve circle, is the fact that if $O—F$ be drawn perpendicular to $O—C_3$, and a perpendicular be let fall from the point $F$ on the admission line, it will be equal in length to the radius of the steam-lap circle. The truth of this proposition is readily seen from the fact that the triangles $F—O—Y$ and $O—K—M$ are equal, because they have equal hypotenuses and are right-angled triangles with the angles $F—O—Y$ and $M—K—O$ equal. Lines $F—Y$ and $O—M$ being similar sides of equal triangles are themselves equal.

To construct the part of the diagram corresponding to the exhaust side of the valve, the reasoning is the same as that just given for the steam side, the piston being, however, on the return stroke from $P_3$ to $C$, in Fig. 29, so that the valve circle comes in the lower half of the figure. The angle of advance and travel of the valve are the same as for the steam side of the diagram, but the lap is somewhat less, since economical performance requires as small a lap as possible, and the lower steam pressures usually prevailing on this side of the valve make it possible to have a tight seating valve without a great amount of lap. The exhaust lead and the points of release and compression correspond respectively to the steam lead and the points of admission and cut-off, and are obtained on the exhaust-valve circle in the same manner as the corresponding points of the steam-valve circle.

Fig. 31 shows a complete diagram, in which admission takes place at $A$, as represented by the angle $A—O—X$, while cut-off takes place at $C$, as given by the angle $C—O—X$. In this figure, the steam lap and steam lead are represented respectively by the distances $O—N'$ and $N'—N$.

In practical construction, it is not possible to have a steam port wide enough to give full opening to the exhaust, so that the width of this port must be marked off, as in the figure, by the arc $W—W'$, the length of the line $L—W$ representing to scale the width of the port so that the exhaust port is open wide when the crank is in the position $O—W$, and remains open until it reaches the position $O—W'$. If this same width of the steam port be laid off in addition to the lap on the diameter of the steam valve circle, the point for the port to be wide open will fall at $E'$ in the figure, thus showing that this port can never be fully open since the distance $O—E'$ that the valve would have to travel is greater than its maximum displacement.

From this it is to be seen that when the valve has moved to give the steam port its maximum opening, the left-hand end of the valve overlaps the right-hand end of the port by an amount equal to the distance $E—E'$

in the figure. Fig. 31 is the diagram for the head end of the cylinder, the diagram for the crank end being similar, with the exception that the laps are different.

In Fig. 31 is shown the probable form of indicator diagram that would be obtained from an engine represented by the valve diagram shown. The points of admission, cut-off, dead center, release, compression, etc., of the valve diagram are projected down to the corresponding points of the indicator diagram. A base line is then established, and the probable line

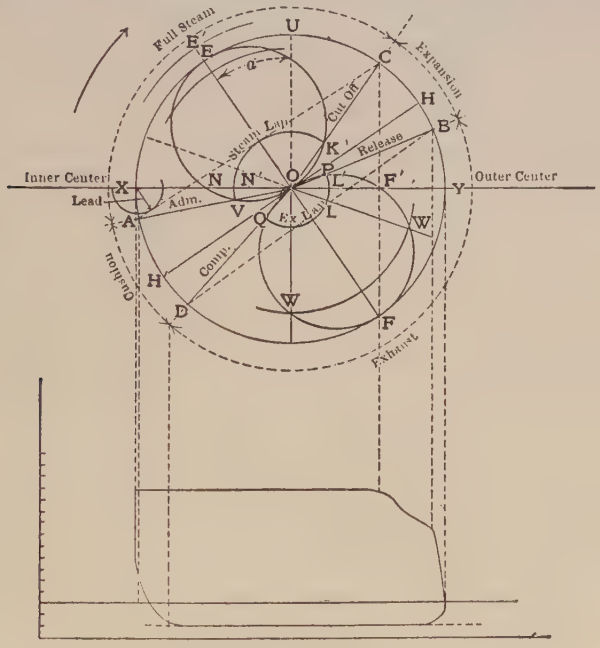


FIG. 31.

of vacuum is laid off on a vertical scale of pressures on which the boiler and admission pressures are also laid off at proper height for the assumed boiler pressure available. In this way, the points where the curvature of the diagram boundary changes are determined, and smooth curves are sketched in by eye to make connections.

Diagrams of this kind are of service principally in designing the engine, but they may be of considerable use in every-day work, by showing approximately what shape the diagram, taken with the indicator, should have. This is especially the case with high-speed engines with which it is often difficult to know whether or not the diagram taken with the indicator represents the actual performance of the engine. In some cases there are forces at work which distort the diagram of the high-speed engine

until it is difficult to recognize the different valve operations. Sometimes the freaky diagrams are the result of irregular expansion and contraction of the valves, ports, and steam passages, with the engine at different temperatures, as after running some time or when just starting up.

Altogether, there are twelve points of information given by the kind of valve diagram shown in Fig. 31, those not already mentioned being the angle of advance $E—O—U$; the travel of the valve $X—O—Y$; release at $B$, given by the angle $B—O—Y$; compression at $D$, given by the angle $D—O—X$; the exhaust lap $O—L$; the exhaust lead $F'—L'$; and the maximum opening.

In any consideration of the valve by the diagram, it is necessary that the points of admission and cut-off, as well as the point of compression and the exhaust lap, be given in terms such that they may be laid down on the diagram by angular distances of the crank from the beginning or end of the stroke. If, as is sometimes the case, these items of information are given as taking place at a certain part of the stroke, it will be necessary to find the angular positions corresponding to the data given by drawing a crank circle or a circle of reference on a new scale. In doing this, it is most convenient to draw the circle concentric to the valve diagram.

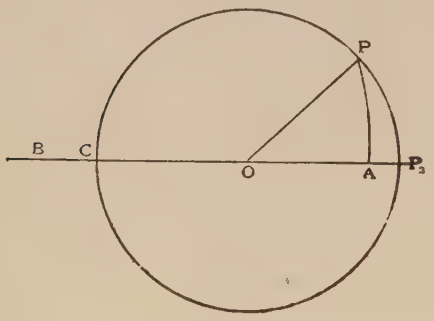


FIG. 32.

As an example, suppose that the cut-off is given as at five eighths of the stroke; the crank circle is then drawn as in Fig. 32, so that the distance $C—P_3$ represents, to the selected scale, the stroke of the engine. The distance $C—A$ is then laid off equal to five eighths of $C—P_3$ and with a radius corresponding, by the selected scale, to the length of the connecting rod and with the center at $B$, an arc is swept from $A$ to $P$. The angle $C—O—P$ thus formed is the angular distance from the beginning of the stroke at which cut-off takes place. This angle is then transferred to the valve diagram and any remaining angular distances still unknown are found and transferred in the same manner.

It will be noted that the different points of information given by the diagram appertain part to the steam side and the others to the exhaust side of the valve, while the angle of advance and the valve travel are common to both sides. In order to construct a complete diagram, it is necessary that four of these points of information be given, although for the construction of either the steam or exhaust side alone three points will be sufficient. Where the complete diagram is to be constructed, one

or two of the points given must belong to a different side of the diagram from the others, and one of the points must be a linear measurement, such as the steam lap, steam lead, or maximum opening; otherwise, as can readily be seen, the angular measurements could be used to construct a valve of any given linear dimensions provided only that the different measurements bear a certain relation to each other. Since the opening to exhaust is greater than that to steam, and since the ports can only be made sufficiently wide to allow full opening, the width of port when given as part of the data in any problem may be taken as the maximum opening of the exhaust port.

## IV

## THE RIDING CUT-OFF VALVE

This chapter has to deal with what is known as the Meyer cut-off valve of which there are in use a few different modifications of design, such as: (*a*) Single valve and cut-off set over the ports in a midposition between the ends of the cylinder; (*b*) valves bridging ports at each end of the cylinder operating as one; (*c*) separate valves over each steam valve port, and separate valves over the steam and exhaust cylinder ports.

The cut-off valve operating in conjunction with the main steam valve, or valves, may be riding over or inside cut-off, but the action must be the same in principle. The only difference is that with more valves used a

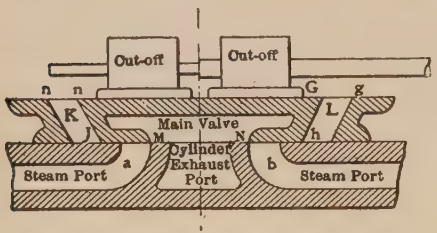


FIG. 33.

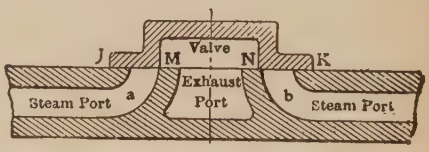


FIG. 34.

shorter steam port and independent and closer adjustment of action is secured.

It is the purpose of this chapter to treat only of the simplest of Meyer cut-off valves, of which Fig. 33 is an illustration. This valve may be so constructed and connected that it may cut off the steam at a fixed and unvarying point, or by means of a hand wheel vary that point, to offset variations in boiler pressure, as in marine work; or where regularity of speed is essential, the cut-off valve may be operated from a shaft or other governor, the main valve being operated from a fixed eccentric.

In the case under discussion the main valve and the cut-off valve are each driven by a separate fixed eccentric. The resemblance of the Meyer cut-off valve, in this connection, to the D slide valve is shown by comparing Figs. 33 and 34.

The main valve of the Meyer combination, Fig. 33, controls the lead,

latest point of cut-off, the exhaust, and the compression. The cut-off valve controls the point at which expansion shall begin. Comparing the two valves placed in mid-position of their travel, it will be seen that the edge *h* of the main valve will cut off the steam from the cylinder the same as the edge *K* of the common slide valve, Fig. 34. Also, the edge *J* of the one valve should act the same as the edge *J* of the other, providing the eccentrics are in the same relative positions. The same applies to the exhaust edges of each valve, *M* and *N*. The edge *h* will cut off steam from the port *b* independently of any action of the cut-off valves.

The longest distance at which steam is admitted is controlled by the main valve, and the work of the cut-off valve is to cut off steam at some earlier point in the stroke. This it does by the edge *G* of the cut-off passing over the edge *g* of the port *L*, and on the other stroke the edge *n* of the cut-off passing over the edge *n* of the port *K*.

## Action of the Valves

For example, let the steam ports be 1 in. wide, both in the valve and the cylinder, and the main valve have a steam lap of $\frac{1}{2}$ in., which will give the main valve a cut-off at about nine tenths of the stroke; and if the travel of the main valve be just sufficient to open fully the steam ports, the action of the main valve will not be unduly distorted by excessive lap or over travel. Assuming that the main steam valve and cut-off valve when in midposition leave the edges *n* and *G* of the cut-off valve equidistant from the nearest edges of the main valve, i.e., one half the width of the steam port, take these as average conditions and follow the movements as follows:

In Fig. 35, the crank (the travel being represented by the circle), is on its dead center at the crank end *B*, the cut-off eccentric in this ex-

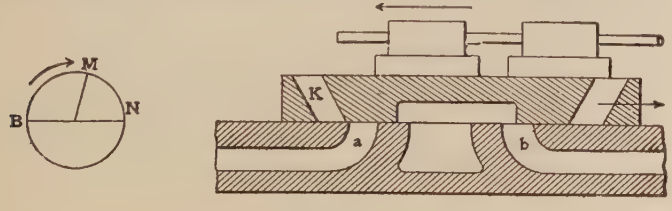


FIG. 35.

ample being set exactly opposite at *N* and the main eccentric at *M*, the main valve having no lead. It will be seen that the valves moving in the direction denoted by their arrows, while the crank starts in the direction shown by its arrow, the admission of steam will occur through the ports *K* and *a* uninfluenced by the cut-off valve.

Fig. 36 shows the position of the valves, eccentrics, and crank at the point of cut-off. The crank being at half stroke, the cut-off is performed by that valve independently of the action of the main valve.

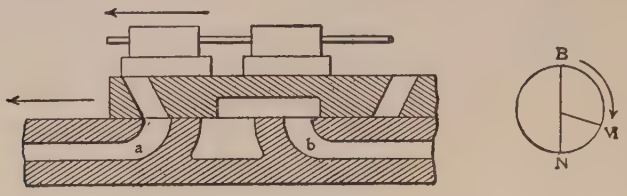


FIG. 36.

Fig. 37 shows the position of the valves and eccentrics at the point of exhaust release on the same end from the port *a*, thus completing the action of the valves for one piston stroke.

Fig. 38 represents the same valves at one point in the processes shown in the previous figures. It is to illustrate the point that the effective area

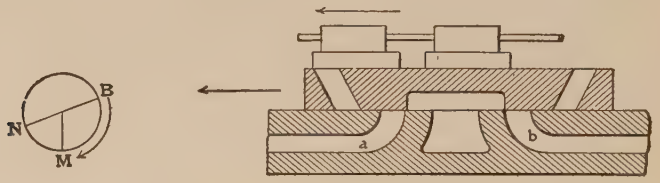


FIG. 37.

of admission of steam through the valve port *K* to the cylinder port *a* is governed by the action of the cut-off valve.

In this case, where the eccentrics are set as they are, the cut-off valve moves across the main valve port *K* before the latter valve has cut off,

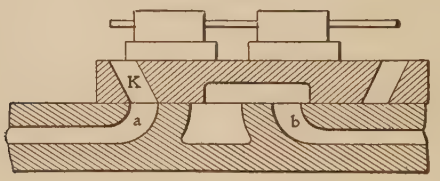


FIG. 38.

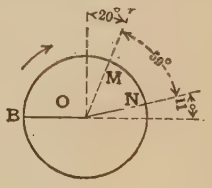


FIG. 39.

thus reducing the effective port area. This condition must be considered to obtain the most effective use of the valves and a change in position of eccentrics to get the quickest action of the valves at the proper time is desirable.

Eccentrics are set as in the foregoing examples mostly on engines

where a reversing of direction of rotation is wanted. But where the direction of travel is constant, a greater latitude of position of the eccentric is allowed and taken advantage of in greater or lesser degree by various builders. Assume that we still have valves with the same amount of lap, etc., as already shown, and study the effects of change of position of the eccentric by a few more illustrations.

In Fig. 39 the circle represents the travel of the crank and eccentrics. The crank is on dead center $B$, ready to start in the direction of the arrow; $O$ is the throw line of the crank $N$ of the cut-off eccentric and $M$ of the main eccentric, $N$ being 169 degrees ahead of the crank and 59

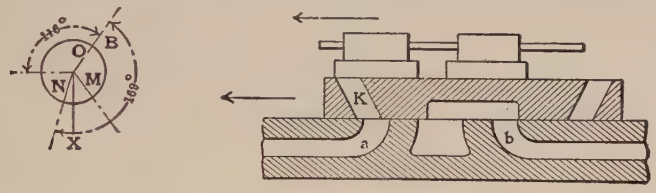


FIG. 40.

degrees ahead of the main eccentric, the angular advance of which is 20 degrees.

Fig. 40 represents the position of the valves and eccentrics at the point of cut-off. Bearing in mind the position of the eccentrics before illustrated, note the action of the same as shown in this figure. In passing the point $X$ the eccentric moves the valve quickest on this stroke. It will then be seen that the cut-off valve has moved its fastest while near cut-off and the eccentric was passing this point; at the same time the main valve has not come to its best speed.

Then noting Fig. 41, which shows the relative positions at point of cut-off of the main valve, it is seen that the two valves have been travel-

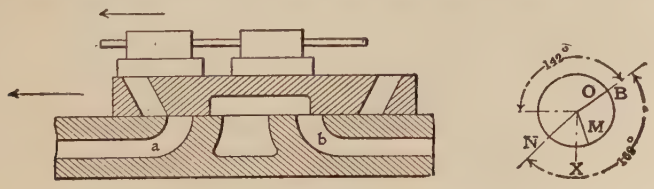


FIG. 41.

ing at nearly the same speed while making the cut-offs, with the cut-off valve going the fastest at the right point and slower than the main valve after the latter has closed the cylinder port, thus shutting out the possibility of reopening by the main valve's catching up and passing the cut-off before the main valve has cut off.

The main valve is traveling faster in Fig. 41 for the added reason that it travels faster while the eccentric is moving up to the point $X$ than after it leaves it, for any given distance of the eccentric travel on that stroke. To illustrate this point, refer to Fig. 42, in which the circle represents the eccentric travel, the line $L$—$L$ the line of valve travel, $M$ the position of the eccentric 35 degrees ahead of the point $X$, and $N$ the position of the eccentric 35 degrees the other side.

Setting a pair of compasses to represent the length of the eccentric rod, place one point at $M$ and mark on the line $L$—$L$ the arc $O$; next set one point at $X$ and scribe the arc $P$; then with one point at $N$, scribe arc $Q$. The distance from $O$ to $P$ is the distance the valve traveled while the eccentric moved from $M$ to $X$, and the distance from $P$ to $Q$ is the distance the valve traveled while the eccentric moved from $X$ to $N$. The difference in valve travel while the eccentric traveled equal distances from $X$ is shown by the arc $r$. This will illustrate why the cut-off valve must

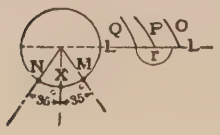


FIG. 42.

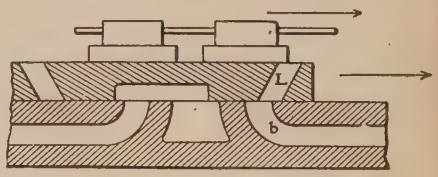


FIG. 43.

travel at least as fast as the main valve from the position shown in Fig. 40 to that shown in Fig. 41.

Now comes the question of length of the eccentric rod. Assuming that in all the cases spoken of in this article an engine of 20-in. stroke were used, it will be found that in the case of setting the cut-off eccentric exactly opposite to the crank, the cut-off of steam occurred at 9 ins. of both strokes, while in the case where the cut-off eccentric was set back 11 degrees in Fig. 39 the cut-off of steam is delayed to the thirteenth inch of one stroke and the sixteenth inch of the other, delaying the cut-off in both strokes and making it unequal. The additional reason for this latter condition is that in this case the cut-off eccentric has been set back and its rod made of such length as to get the longest point of cut-off without a reopening.

To equalize the points of cut-off it is necessary to move the cut-off eccentric back more and shorten the rod. In Fig. 43, for example, the positions of the valves are shown at the time the piston is on the thirteenth inch of its motion on the back stroke (this being the point of cut-off for the other stroke), and it is shown that the steam port $L$ is not yet closed. If, to close it, the cut-off eccentric be moved ahead, it will hasten the point of cut-off for the other stroke, and if we lengthen the rod to close

*L*, it will *delay* the point of cut-off for the other stroke, and that would in this case cause a reopening.

The course to pursue is to change the position of the eccentric and the length of the rod as well, adjusting the two until the ports just escape reopening and the cut-off is equal. In this way the longest possible equalized points of cut-off are obtained.

Allowing that in every change of position of the cut-off eccentric a corresponding change of length of rod must be made: Referring back to Fig. 40, with eccentrics set as here (and the two valves moving together after the point of cut-off), the cut-off valve will not act on the forward stroke after the thirteenth inch of piston stroke, and since the main valve cuts off after the eighteenth inch of the stroke, therefore no cut-off can be effected between these points.

That this cannot be remedied by moving the cut-off eccentric may be shown as follows: Referring again to Fig. 40, if the cut-off eccentric were moved farther ahead, increasing its angle of 169 degrees, the cut-off would occur earlier, while if the angle were diminished, the cut-off would not be effected by the cut-off valve, because it would not fully cover the port.

This will be seen by reference to Fig. 44, in which the cut-off eccentric is moved closer to *X*, and as a result the cut-off is effected by the main

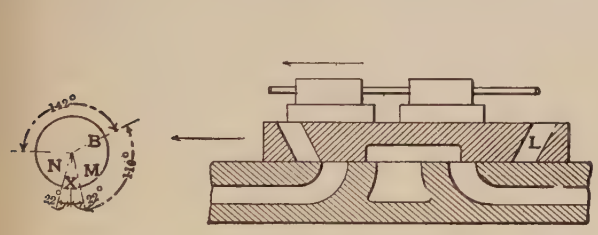


FIG. 44.

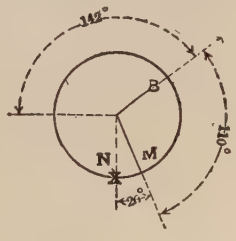


FIG. 45.

valve. Finally if the cut-off eccentric were moved to the position *X*, Fig. 45, at the time the main eccentric stood at *M*, the cut-off valve would not effect the cut-off at all. The cut-off eccentric is thus shown to be in position to cut off at the latest possible point, without reopening the port, as shown in Fig. 40.

Having limited the position of the cut-off eccentric in one direction, the next step is to find how far it can be set to cut off as early in the stroke as possible.

In the foregoing examples the cut-off was set at 180 degrees from the crank, or at a lesser angle ahead of the crank, but it may be set at some angle behind the crank instead of ahead of it. It is understood that *ahead* means less than 180 degrees ahead of the crank in the direction

of rotation, and *behind* the crank is less than 180 degrees in the direction opposite the direction of rotation from the crank.

In Fig. 46, for instance, it is set at 90 degrees behind the crank, the valve lap and travel remaining the same as before, the crank $B$ on "dead

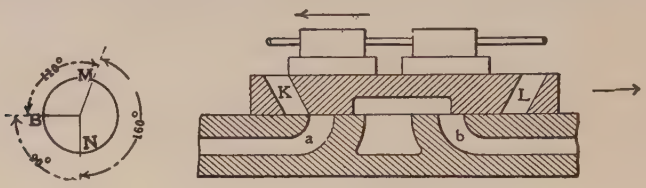


FIG. 46.

center," the main valve having no lead, and the port $a$ being closed. In Fig. 47 are shown the positions at the point of cut-off, the crank having moved but 22 degrees.

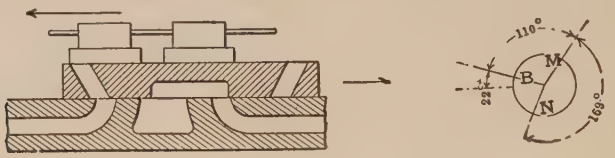


FIG. 47.

On continuing the motion, the ports will arrive at the position shown in Fig. 48, from which it will be seen that the cut-off eccentric being at $N$, and the main eccentric at $M$, and the crank at $B$, the movements of the two valves would be in opposite directions. The cut-off valve will, therefore, keep the port $K$ closed until the valves again change direction and approach the positions shown in Fig. 46; and it is clear that if the

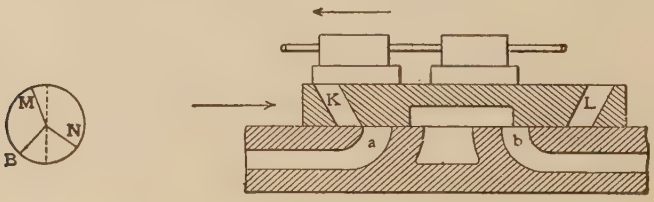


FIG. 48.

cut-off eccentric were set at less than 90 degrees behind the crank, the cut-off valve would first effect the cut-off, then lag behind and reopen the port $K$. In Fig. 49, for example, the cut-off eccentric has been advanced to 86 degrees behind the crank, and the cut-off valve after having

cut off the steam lags behind and has begun its return stroke, allowing the ports to reopen and live steam to reënter, as denoted by the arrow. Therefore, the least possible angle behind the crank for a cut-off valve is 90 degrees. These are the principal points to be understood and should be quickly grasped when ready to set these valves.

The ranges of angle of advance for both the main and cut-off valves here given are the maximum in either direction. In engineering practice, various builders vary the amount of advance and valve lap, but it is within this range. Some designers have less lap than herein given, say 25 per cent. of lap, and so adjust the position of the eccentrics that the cut-off will conform to the condition of the lap. In a multiported cut-off

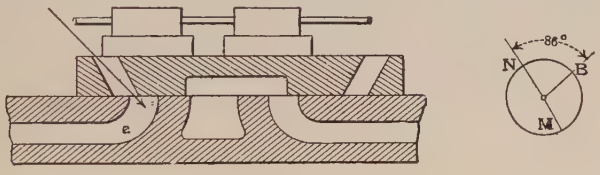


FIG. 49.

valve is exhibited the greatest degree of perfection, as it gives a maximum opening with a minimum lap.

It is not the writer's purpose to go too deeply into the design of this valve, only just sufficiently to set the valves with the hints that follow. Before going further, however, it is well to dwell on the principal points already brought out:

First, all classes of the Meyer cut-off valve are similar in action to the D slide valve, and easier to set for complicated conditions.

Second, Figs. 35, 36, 37, and 38 have to deal with single valves and eccentrics, with the cut-off set exactly opposite the crank. Such valve and eccentric arrangement is found mostly on marine engines, sometimes using a hand wheel. The use of the hand wheel on the valve stem gives the effect of more or less lap.

Third, where the direction of rotation is constant, and especially in stationary practice, a modification of the position of the cut-off eccentric is more desirable and is varied, as shown by Figs. 39, 40, 41, 42, 43, 44, 45, 46, 47, 48, and 49. Where the lap is 50 per cent. of the port, the following facts are to be remembered in locating the position of the eccentric: That to get a cut-off later than one-half stroke, the eccentric must be set less than 180 degrees *before* the crank down to 169 degrees before the crank (no less), as shown in Figs. 39, 40, and 41. To get a cut-off at earlier than one-half stroke, the eccentric must be set at less than 180 degrees behind the crank, down to 90 degrees behind the crank (no less), as shown in Figs. 43, 44, 45, 46, 47, 48, and 49.

Fourth, the multiported valves may change this so that in some cases, with small lap, an early cut-off may be secured with the eccentric less than 180 degrees ahead.

Fifth, in engines equipped with multiported valves, the length of rods, eccentric travel, and valve lap are all attended to by the designer, so that the essential for the engineer in charge (after wear has set in and slipped eccentrics are a possibility) is to know the proper position of the eccentric and how to locate that point practically with all the gear mounted on the engine.

Sixth, with all cut-off valve gear the main-valve action is first looked into, and its action is to be considered the same as in any D slide valve. Then the cut-off valve is to be considered as the steam edges only.

## To Set the Valves

On all engines, when preparing to set the valves, the first thing is to find and adjust all lost motion in the valve gear, then proceed to place the engine on the "dead center." Owing to the fact that the crosshead will remain stationary a short time before the crank pin passes the center, and remain so until the crank has passed the center a short distance, it is best to take greater care than to simply note the point where the cross-

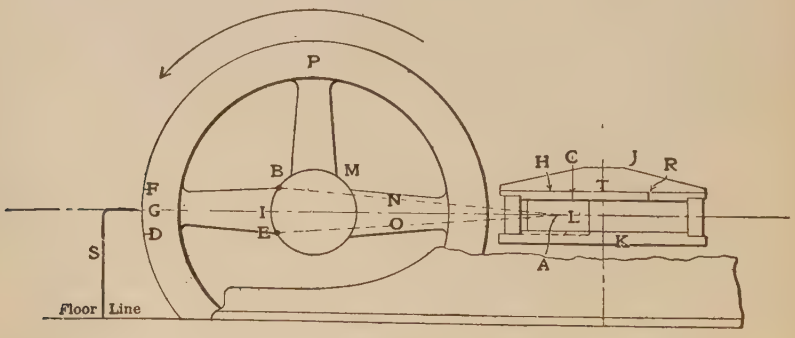


FIG. 50.

head rests at the end of the stroke, in order to find the "dead center." The writer believes the process illustrated in Fig. 50 is an accurate process.

In the figure, *J* and *K* represent two crosshead guides, *L* the crosshead, *M* the path of crank travel, *N* and *O* the center lines of the connecting rod at different positions, and *P* the balance wheel. To start with, make a tram *S* out of any material convenient, preferably round steel. Turn the engine around until the crank is at the point *B* in any position where the crosshead is still moving with the other parts, near the end of the stroke. Then place mark *A* on the crosshead, running the

mark up close to nearest or most convenient guide bar. (Where the crosshead is down in the frame of the engine, use a straight edge across the top of the holding-down bars.) Then place mark *C* on the guide bar opposite the mark *A* on the crosshead. Now, with the tram *S* (one point on the given mark on the floor opposite the fly wheel, and on a line with one edge of the rim) scribe the mark *D* on the face or side of the rim, making the arc come to the edge in either case.

Next turn the engine so that the crank passes the center and the mark *A* on the crosshead again comes to the mark *C* on the guide bar. Then take the tram, again resting it on the same point on the floor, and scribe the arc to the mark *F* on the same edge of the rim of the wheel. The crank will then be at *E*.

Now place prick-punch marks as near the edge as possible at the points *D* and *F*, and with a pair of dividers bisect the distance from *D* to *F* and make the mark *G*. Turn the engine back so that with the tram resting at the same point on the floor, the other point of the tram will touch *G*. The crank will then be on "dead center" at *I*, and the mark *A* on the crosshead will be opposite the mark *H* on the guide bar, which should be marked as the point where the crosshead reaches the end of the stroke.

Turn the engine to the opposite end of the stroke and repeat the foregoing moves, when both "dead centers" will have been found and marked. Now, with a marking chisel go over all the scribe marks and make them permanent, and where the center punch marks are on the rim of the wheel, the floor and the frame, it is a wise precaution to place marks like this ☐ around the center punch marks. It is also a good means of finding the marks in future.

The next move is to get the eccentric on "dead center." Where the eccentrics are fastened by set-screws, friction keys, or keys easily withdrawn, loosen up on one or the other, as the case may be, and turn the eccentric around the shaft while finding the centers. Where there is a fixed eccentric, as in governor eccentrics, the engine itself must be turned around to find the points desired.

Make a tram *A*, Fig. 51, out of a board or sheet steel and place at the point indicated a nail or other pointed iron or steel, just far enough out so that arcs *B C* and *D E* can be scribed, bringing the arcs down to the edge of the eccentric at the points *B* and *D*. Care should be exercised, in using the tram, to have the end on the shaft or the boss of the eccentric the same distance away from the eccentric in both instances. Take a pair of dividers and from the points *B* and *D* scribe arcs so that they will exactly intersect on the eccentric edge at *F*. This will be the center line of the eccentric.

Make another tram *G*, Fig. 52, make a mark *H* with the center punch on the eccentric rod, and with one leg of the tram on the point *H* scribe

the arcs $J\,K$ and $L\,M$ on the eccentric strap coming to the points $J$ and $L$ on the edge of the strap. With the dividers scribe from points $J$ and $L$ arcs exactly intersecting each other at the point $N$.

With a marking chisel make permanent marks at the point $F$ on the eccentric and the point $N$ on the eccentric strap. Bring the eccentric

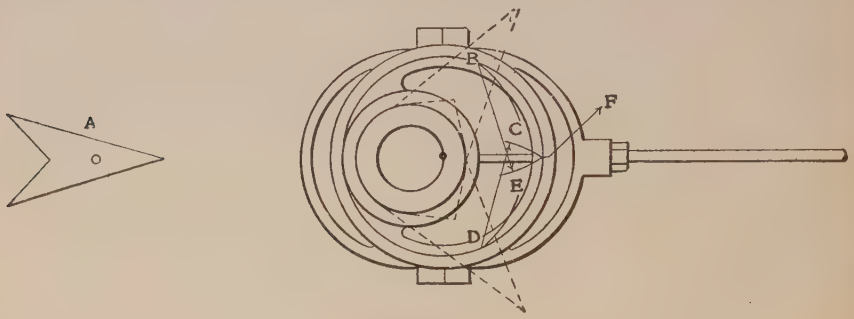


FIG. 51.

around so that both points correspond and the eccentric will then be on one "dead center." From the points $J$ and $L$ scribe the arcs $O\,P$ and $Q\,R$, ending at the points $O$ and $Q$ on the edge of the strap. From the points $O$ and $Q$ scribe arcs intersecting at the point $S$ on the edge of the strap. With the chisel make a mark on the strap at $S$. Bring the eccentric around so that the point $F$ corresponds with the point $S$, and the eccentric will be on the opposite end of the travel.

Now assume an engine equipped with the Meyer cut-off, substantially as in the illustrations, i.e., a single main valve and single cut-off, each

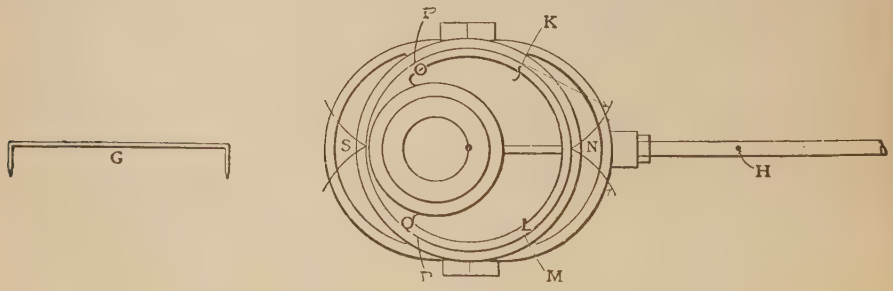


FIG. 52.

driven by one eccentric. Also assume that the builders have made all proportions, lap, width of ports, and bridges correct. Take out the cut-off valve and start to adjust the action of the main valve, bearing in mind it should be set practically the same as any D slide valve.

Fig. 53 shows a steam chest with the valves removed. Take a scale and scriber and mark lines from the lower end of the ports *A* and *C* on the valve seat down to the bottom of the valve chest, and with an adjustable square resting on the surface of the valve-chest flange carry out these lines to the points, *a*, *b*, *d*, and *e* on the valve-chest flange. Then bisect the distance between the inner edges of the steam ports, get a center line

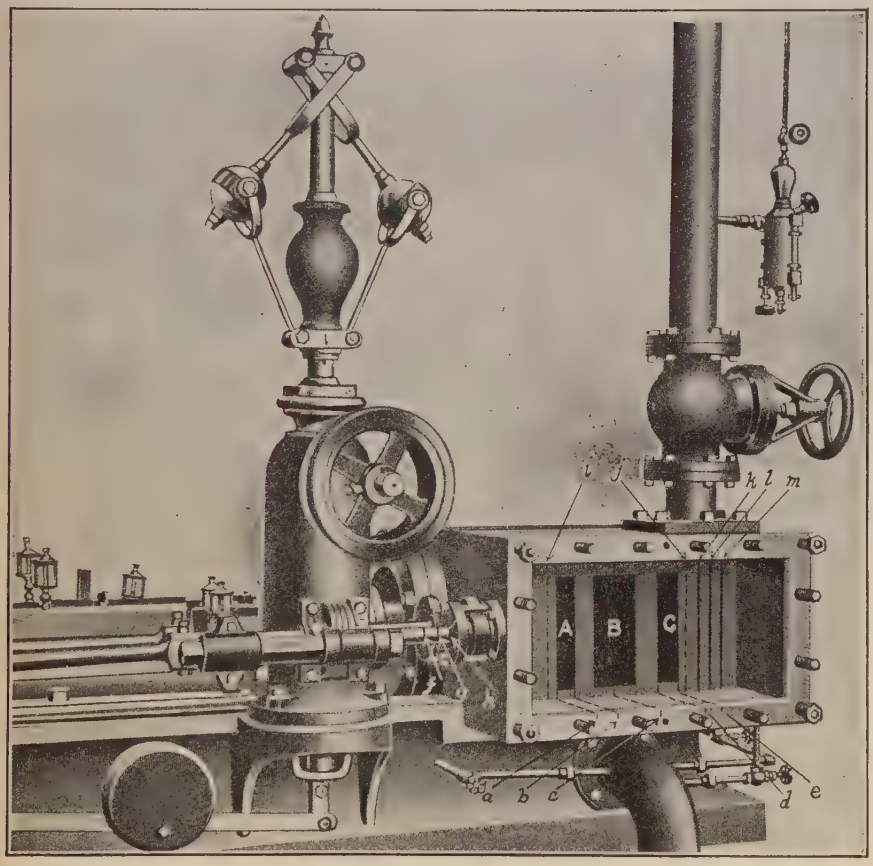


FIG. 53.

through the middle of the exhaust port *B* and carry it out in the same way to the point *c* on the steam-chest flange.

In Fig. 54 is shown the main valve in position, with the center line *A* corresponding with the center line *c* on the steam-chest flange. This shows the valve on the center of travel.

With the main valve in position and connected up, proceed as shown in Figs. 51 and 52, and place the eccentric on the "dead center" nearest

the engine cylinder. With a scriber mark downward on the edge of the valve farthest from the eccentric, which will result in the line *m* on the valve seat (Fig. 53). Move the eccentric to a point opposite the center and scribe downward along the same edge of the valve, which will give line *k* on the valve seat. With the dividers or scale locate and mark the line *l* on the valve seat, half way between the lines *k* and *m*. Then turn

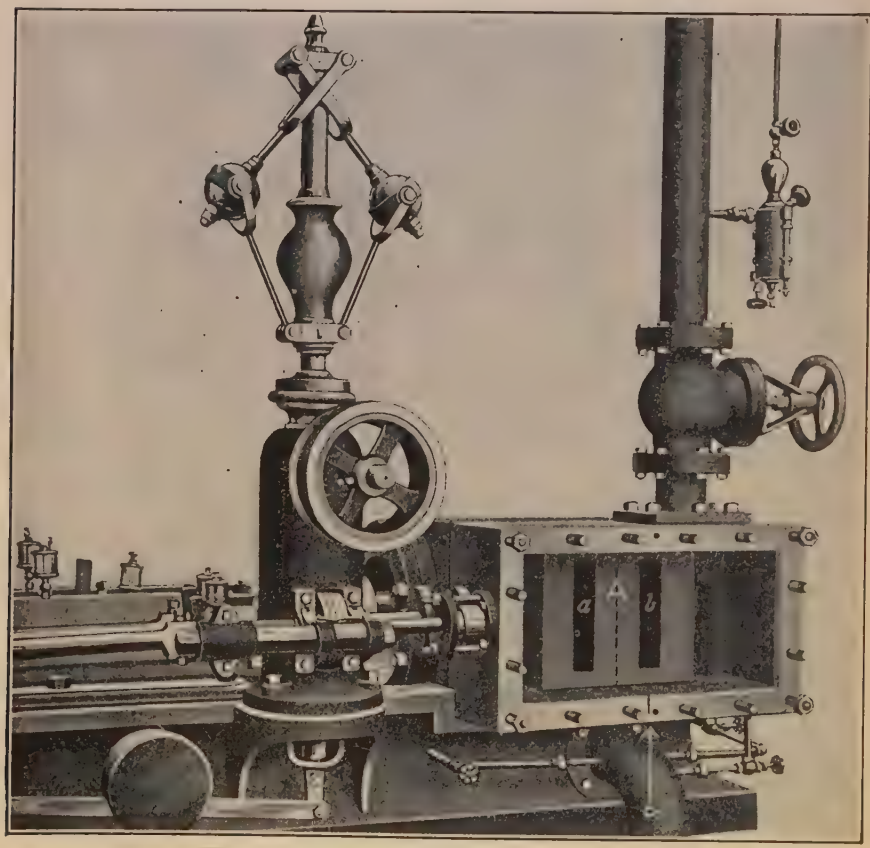


FIG. 54.

the eccentric around until the same edge of the valve comes to the line *l*. The center line *A* on the valve should now correspond with the line *c* on the steam-chest flange, as shown in Fig. 54.

With the valve in midposition, reach through its ports *a* and *b*, Fig. 54, with a scriber and mark along its steam edges on the valve faces the lines *i* and *j* (Fig. 53).

Upon removing the valve again it can be seen what the lap is, and

whether it is even, by measuring from the line *i* to the nearest edge of the port *A*, and from the line *j* to the nearest edge of the port *C*.

When it is impossible to see the valve seat with the main valve in position, so as to scribe the lines *k*, *l*, and *m* (Fig. 53) on the valve seat, proceed as follows:

After marking the port lines and center on the valve-chest edge, as shown in Fig. 53, replace the valve and, placing the eccentric on the center nearest the cylinder, with the scriber mark a line *f* on the valve stem where it leaves the stuffing-box gland. Placing the eccentric on the opposite center, mark a line *h* on the valve stem at the same point at the edge of the gland. Find and mark the line *g* half way between *f* and *h* and turn the eccentric so that the line *g* is just entering the gland. The valve should be on the center of its travel and its center line *A*, Fig. 54, should correspond with the line *c*. If this latter process is followed, care should be taken to have the stuffing-box gland pulled up so that it will not move in or out with any movement of the stem.

In Fig. 54 the marks are shown on the cut-off valve stem, as it is easiest seen, but the same application applies to both stems.

Now place the engine on "dead center" and pull the eccentric around until the lead is given and then fix the eccentric in position. Pull the engine around to opposite "dead center," and observe the lead on that end. Make the lead the same on each end, or make the usual allowances for the crank end of a horizontal engine or the bottom end of a vertical engine, as determined by the builder. Place the cut-off valve in position connected up to valve stem. Use the same precautions on the cut-off eccentric as with the main eccentric to get "dead center."

Then when the main valve is in midposition place the cut-off valve in the same position, and observe if the cut-off edges are the same distance from the steam edges of the main valve. If they are, set the engine at one half its stroke. To do this, divide the distance *II* and *R* on the guide *J*, Fig. 50 (which distances denote the end of the stroke), so as to get point *T*. Let the mark *A* correspond to *T*. Now pull the cut-off eccentric around until the cut-off valve edge is line and line with the cut-off edge of the main valve. Set the cut-off eccentric and pull the engine over to one-half stroke, going in the opposite direction. Observe if the cut-off is the same. If not, then the eccentric must be set ahead or back to even it up.

With both eccentrics set and secured in place, turn the engine around and observe that there is no reopening of the cut-off valve after it has cut off and before the main valve has cut off. Bear in mind the points brought out as to position of the eccentrics and lap of the valves in reference to cutting off before or after one-half stroke.

Where cut-off valves are operated by automatic governors all the rules

here mentioned are to be observed when the governor weights are resting at the inner position of their travel with everything connected up. After the valve setting is all done, the governor spring or springs should be disconnected and the governor parts blocked out to the other extreme position. Then while the engine is turned a complete revolution, it should be observed that the cut-off valve covers the main valve ports at all points of the revolution. For finer adjustment of the valves recourse must be had to the indicator.

V

## THE CORLISS STEAM ENGINES*

To equalize the clearance at both ends of the steam cylinder, place the crank pin upon its forward dead center, loosen the piston-rod nut, and screw the piston into the crosshead until it is brought up against the front head of the cylinder; after which screw up the nut until it touches the crosshead hub without jamming. Now place the crank pin upon its opposite dead center and back out the piston rod until the piston is forced against the back head, being careful not to disturb the position of the nut upon the rod. The distance between the face of the nut and cross-

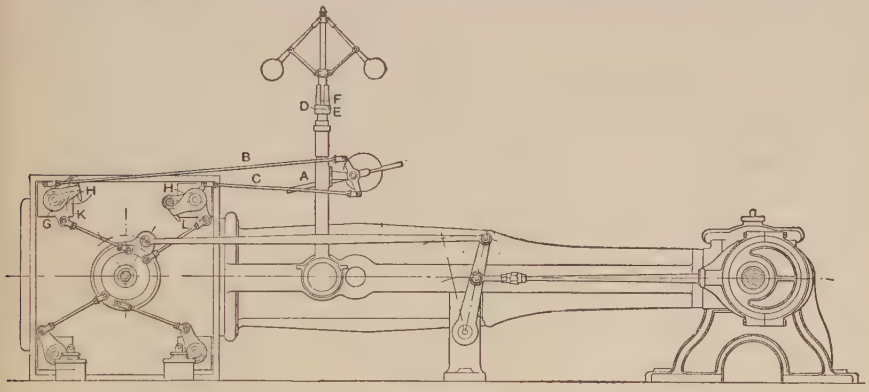


FIG. 55.

head hub represents the total clearance of the cylinder, which should be adjusted by screwing the piston rod into the crosshead half of the amount of total clearance and tightening and the nut.

This method is sufficiently accurate for all practical purposes if care is exercised not to disturb the position of the nut upon the rod. A better way if time permits is to mark in some convenient position upon the crosshead guide the stroke of the engine, obtained by placing the crank pin upon its opposite dead centers, scribing these lines coincident to the same edge of the crosshead shoe. Remove the connecting rod, and force the piston alternately against the back and front heads of the cylinder,

* Contributed to *Power*, by John L. Flock.

scribing both positions upon the guide, using the same edge of the crosshead shoe as before. The distance between these two marks will represent the stroke of the engine plus the total clearance; subtracting from this the stroke of the engine will give the total clearance of the cylinder.

Now place the connecting rod in position with the crank pin upon the forward dead center and the piston against the front head. Screw up the piston-rod nut until it touches the crosshead hub without jamming, and equalize the clearance by backing the piston rod out of the crosshead, a distance equal to half of the total amount of clearance, measuring between the face of the nut and end of the crosshead hub, as before, and set up the nut.

After the clearance has been ascertained a good plan is to place a center punch mark upon the piston rod and crosshead hub parallel to the axis of the cylinder, and make a gauge of $\frac{1}{4}$-in. round steel, the distance between the points of which equals that of the center punch marks. This gauge will be found of the greatest convenience should it at any time be necessary to dismantle the engine. All that is required to readjust the clearance on assembling the engine is to screw the piston rod into the crosshead, until the center punch marks coincide with the points of the gauge.

To set the valves of horizontal Corliss steam engines, proceed as follows: Take off the back bonnets and remove the valves. With a sharp chisel mark upon their back end a line, touching the circumference of the valves, coincident to the steam edges of the valves, and also place marks in some convenient position on the valve housings representing the edges and width of the steam ports, and replace the valves. Place the swing plate and rocker arm in a vertical position, with crank pin on its dead center toward steam cylinder, and mark the swing-plate hub, prolonging the line upon the swing-plate bracket. Loosen the eccentric and rotate it, adjusting the eccentric rod so that the line upon the swing-plate hub vibrates equally distant each side of the line upon the swing-plate bracket, after which secure the swing plate in its vertical position by inserting several thicknesses of emery cloth under the washer of the swing-plate stud and tightening the nut. Give the steam and exhaust valves their required lap, using for this purpose a pair of dividers and measuring from the mark representing the cut-off edge of the port and steam edge of the valve on the circumference. After the steam and exhaust rods have been secured for equal lap at both ends of the steam cylinders, release the swing plate and advance the eccentric forward upon the shaft, until the line representing the edge of the left-hand steam valve has traveled beyond the incision representing the cut-off edge of the port indicating lead, and secure the eccentric to the shaft. The engine should now be rotated and the marks upon all four valves carefully gone over,

to ascertain whether the lead is equal at both ends and the valves have sufficient overtravel to prevent wire drawing at early cut-off. Half-inch overtravel with $\frac{1}{16}$ in. lead will be found adequate for the majority of engines; the steam lap should be from $\frac{1}{4}$ to $\frac{5}{8}$ in., with exhaust lap ranging from $\frac{7}{32}$ to $\frac{1}{16}$ in., depending upon the size of the engine and the amount of compression required. The lead of the exhaust valves should always be in excess of that of the live steam valves, so that just on the point of opening the live steam valves still have lap to prevent the blowing through of steam. This completes the setting of the eccentric, rocker arm, swing plate, and steam and exhaust valves as far as can be done without the use of an indicator.

Adjust the coupling rod between the governor weight bar lever *A* so that it oscillates equally out of its horizontal position when the governor balls are brought into its highest and lowest position.

When the steam engine is to be started, the steam cylinder must be able to receive the full steam pressure, and the steam valves must not be tripped. To enable this to be done, governors of Corliss engines are supplied with a loose collar *D* having a slot *E* fitted to the governor banjo, or a loose pin which is fitted to a series of holes and performs the same functions as the collar.

When the governor balls have attained their normal position, the collar should be set so as to allow the lifting sleeve *F* to sink below the upper edge of the collar into the slot *E*. If a pin is used, it should be removed for the same purpose. The reason for this is obvious, for should the governor belt break while the governor is in this position, the trip rods *B* and *C* will place the safety toes *G* in such a position as to permanently unhook the live steam valves, and the engine will stop. When starting, the collar or pin is placed so that the safety toes are out of action.

To adjust the trip cams *H* and safety toes *G*, place the governor lifting sleeve upon the top of the collar *D* as in the position for starting the engine, rotate the crank shaft so that the eccentric is in its extreme forward position, as shown in the drawing. The correctness of this position is assured by referring to the marks upon the swing-plate hub and bracket. The mark denoting the vertical position of the swing plate should now coincide with that upon the bracket representing the forward travel of the swing plate. Shorten or lengthen the trip rod *B*, as the case may be, so that the trip cam *H* will just touch the block upon the latch hook without disengaging the hook from the latch block upon the steam lever, but will do so, allowing the valve to cut off, when a piece of iron or wood, $\frac{1}{4}$ in. thick, is inserted between the top edge of collar *D* and governor lifting sleeve *F*.

Set the safety toe *G* in such a position as will fully and securely unhook the live steam valve when the collar *D* is turned for regular running,

## TABLE SHOWING PRINCIPAL DIMENSIONS AND HORSE POWER OF CORLISS ENGINES WITH DIFFERENT STEAM PRESSURES AND POINTS OF CUT-OFF

| Size of Engine | Revolutions per Minute | Piston Speed, Feet per Minute | Boiler Pressure 90 Pounds | | | Boiler Pressure 100 Pounds | | | Boiler Pressure 125 Pounds | | | Band Wheel | | | Weight of Engine and Fly-Wheel Complete | Steam Lap | Steam Lead | Exhaust Lap | Trial Compression* | Pipe | |
|---|---|---|---|---|---|---|---|---|---|---|---|---|---|---|---|---|---|---|---|---|---|
| | | | Point of Cut-off | | | Point of Cut-off | | | Point of Cut-off | | | Diameter | Face | Weight | | | | | | Steam Diam. | Exhaust Diam. |
| | | | 1-5 | 1-4 | 1-3 | 1-5 | 1-4 | 1-3 | 1-5 | 1-4 | 1-3 | Ft. | In. | Pounds | Pounds | Inches | | | | In. | In. |
| 10×20 | 120 | 400 | 38 | 45 | 55 | 43 | 53 | 62 | 56 | 63 | 77 | 7 | 13 | 4,500 | 10,500 | $\frac{1}{8}$ | $\frac{1}{64}$ | $\frac{1}{16}$ | $1\frac{1}{2}$ | $2\frac{1}{2}$ | 3 |
| 10×24 | 120 | 480 | 45 | 54 | 66 | 51 | 61 | 74 | 66 | 75 | 92 | 8 | 13 | 5,000 | 12,270 | " | " | " | " | 3 | 4 |
| 10×30 | 100 | 500 | 47 | 57 | 69 | 54 | 64 | 78 | 70 | 79 | 96 | 8 | 13 | 5,400 | 13,250 | " | " | " | " | 3 | 4 |
| 11×20 | 120 | 400 | 46 | 52 | 63 | 52 | 62 | 75 | 68 | 76 | 93 | 8 | 13 | 6,000 | 14,000 | " | " | " | $1\frac{7}{8}$ | 3 | 4 |
| 11×24 | 120 | 480 | 55 | 67 | 82 | 62 | 74 | 89 | 71 | 83 | 101 | 8 | 13 | 7,000 | 14,600 | " | " | " | " | 3 | 4 |
| 11×30 | 100 | 500 | 57 | 69 | 84 | 65 | 77 | 94 | 84 | 95 | 116 | 8 | 13 | 7,800 | 18,000 | " | " | " | " | 3 | 4 |
| 12×24 | 120 | 480 | 65 | 78 | 95 | 74 | 87 | 106 | 96 | 107 | 131 | 9 | 13 | 9,100 | 19,300 | " | " | " | 2 | 3 | 4 |
| 12×30 | 90 | 450 | 62 | 74 | 90 | 69 | 83 | 101 | 89 | 102 | 144 | 9 | 13 | 10,000 | 21,100 | $\frac{3}{16}$ | " | " | " | 3 | 5 |
| 12×36 | 85 | 480 | 70 | 84 | 102 | 78 | 94 | 114 | 101 | 116 | 152 | 10 | 15 | 10,300 | 22,500 | " | " | " | " | $3\frac{1}{2}$ | 5 |
| 14×28 | 95 | 443 | 78 | 93 | 114 | 90 | 105 | 128 | 112 | 130 | 156 | 10 | 15 | 10,500 | 22,800 | " | " | " | $2\frac{1}{2}$ | $3\frac{1}{2}$ | 5 |
| 14×32 | 90 | 479 | 85 | 100 | 122 | 97 | 114 | 138 | 120 | 140 | 170 | 10 | 15 | 10,800 | 26,500 | " | " | " | $2\frac{3}{4}$ | $3\frac{1}{2}$ | 5 |
| 14×36 | 85 | 510 | 95 | 114 | 139 | 107 | 128 | 156 | 137 | 158 | 193 | 10 | 19 | 11,000 | 28,500 | " | " | " | $2\frac{1}{2}$ | $3\frac{1}{2}$ | 5 |
| 14×42 | 82 | 574 | 107 | 128 | 156 | 120 | 144 | 175 | 154 | 178 | 217 | 11 | 19 | 11,400 | 29,100 | $\frac{1}{4}$ | " | " | " | $3\frac{1}{2}$ | 5 |
| 16×32 | 90 | 479 | 110 | 132 | 161 | 126 | 149 | 182 | 158 | 184 | 224 | 12 | 21 | 12,000 | 29,100 | " | " | " | 2 | 4 | 6 |
| 16×36 | 82 | 492 | 120 | 144 | 175 | 135 | 162 | 197 | 173 | 200 | 244 | 12 | 21 | 12,300 | 29,400 | " | " | " | $2\frac{1}{4}$ | 4 | 6 |
| 16×42 | 78 | 546 | 133 | 159 | 194 | 150 | 179 | 218 | 192 | 221 | 269 | 12 | 23 | 12,600 | 34,800 | " | " | " | $2\frac{1}{2}$ | 4 | 6 |
| 16×48 | 75 | 600 | 145 | 176 | 215 | 165 | 199 | 242 | 215 | 245 | 299 | 12 | 25 | 13,000 | 34,840 | " | " | " | " | 4 | 6 |
| 18×36 | 80 | 480 | 148 | 177 | 216 | 166 | 199 | 242 | 214 | 246 | 300 | 12 | 25 | 14,000 | 34,900 | $\frac{5}{32}$ | " | " | $2\frac{1}{2}$ | 5 | 7 |
| 18×40 | 80 | 533 | 156 | 185 | 225 | 179 | 210 | 256 | 222 | 258 | 312 | 12 | 25 | 14,600 | 36,000 | " | " | " | $2\frac{3}{4}$ | 5 | 7 |
| 18×42 | 78 | 546 | 168 | 202 | 246 | 189 | 227 | 277 | 244 | 281 | 321 | 14 | 25 | 15,000 | 37,900 | " | " | " | " | 5 | 7 |
| 18×48 | 75 | 600 | 185 | 222 | 271 | 208 | 249 | 504 | 268 | 308 | 376 | 16 | 25 | 16,000 | 42,900 | " | " | " | " | 5 | 7 |
| 20×40 | 80 | 533 | 192 | 228 | 278 | 220 | 257 | 314 | 273 | 317 | 385 | 16 | 25 | 17,000 | 45,500 | " | " | " | $2\frac{1}{4}$ | 5 | 7 |
| 20×42 | 75 | 525 | 200 | 240 | 292 | 225 | 270 | 329 | 289 | 333 | 406 | 16 | 31 | 18,000 | 48,300 | " | " | " | $2\frac{1}{2}$ | 5 | 7 |
| 20×48 | 72 | 576 | 219 | 263 | 321 | 246 | 296 | 361 | 317 | 365 | 445 | 16 | 31 | 20,000 | 50,150 | " | " | " | 3 | 5 | 7 |
| 20×60 | 65 | 650 | 248 | 297 | 362 | 279 | 334 | 407 | 358 | 413 | 504 | 14 | 33 | 20,800 | 51,000 | " | " | " | " | 5 | 7 |
| 22×36 | 100 | 600 | 262 | 310 | 380 | 300 | 350 | 427 | 373 | 435 | 531 | 16 | 31 | 21,300 | 51,900 | $\frac{11}{32}$ | " | " | $2\frac{1}{2}$ | 6 | 8 |
| 22×42 | 75 | 525 | 242 | 290 | 343 | 271 | 326 | 398 | 350 | 403 | 491 | 14 | 33 | 22,000 | 53,650 | " | " | " | $2\frac{3}{4}$ | 6 | 8 |
| 22×44 | 80 | 586 | 256 | 304 | 370 | 292 | 343 | 418 | 361 | 425 | 518 | 14 | 37 | 23,000 | 56,600 | " | " | " | $2\frac{3}{4}$ | 6 | 8 |
| 22×48 | 72 | 576 | 265 | 318 | 388 | 298 | 358 | 437 | 385 | 443 | 540 | 16 | 37 | 24,000 | 60,000 | " | " | " | " | 6 | 8 |
| 22×60 | 65 | 650 | 299 | 359 | 433 | 336 | 404 | 493 | 433 | 499 | 609 | 16 | 31 | 24,500 | 61,500 | " | " | " | " | 6 | 8 |
| 24×36 | 100 | 600 | 314 | 371 | 455 | 360 | 420 | 512 | 445 | 520 | 634 | 16 | 37 | 25,000 | 62,500 | $\frac{3}{8}$ | " | " | $2\frac{1}{2}$ | 7 | 9 |
| 24×42 | 75 | 525 | 287 | 347 | 423 | 323 | 392 | 478 | 420 | 482 | 588 | 16 | 40 | 26,000 | 64,000 | " | " | " | $2\frac{3}{4}$ | 7 | 9 |
| 24×48 | 70 | 560 | 307 | 368 | 448 | 345 | 414 | 505 | 444 | 511 | 723 | 16 | 40 | 27,000 | 81,300 | $\frac{7}{16}$ | " | " | " | 7 | 10 |
| 24×52 | 75 | 619 | 338 | 400 | 490 | 386 | 450 | 550 | 480 | 560 | 683 | 16 | 40 | 26,300 | 84,500 | " | " | " | $2\frac{3}{4}$ | 7 | 9 |
| 24×60 | 65 | 650 | 356 | 427 | 520 | 401 | 481 | 587 | 515 | 594 | 724 | 18 | 40 | 28,000 | 90,000 | " | " | " | " | 7 | 9 |
| 26×36 | 100 | 600 | 366 | 433 | 530 | 420 | 490 | 598 | 520 | 607 | 740 | 18 | 40 | 29,000 | 90,500 | " | " | " | $2\frac{1}{2}$ | 7 | 10 |
| 26×48 | 70 | 560 | 360 | 432 | 527 | 405 | 486 | 593 | 521 | 600 | 732 | 16 | 40 | 32,000 | 92,000 | $\frac{9}{16}$ | " | " | " | 7 | 10 |
| 26×52 | 75 | 649 | 395 | 469 | 572 | 454 | 530 | 646 | 560 | 655 | 799 | 16 | 40 | 30,000 | 92,000 | " | " | " | $2\frac{3}{4}$ | 7 | 10 |
| 26×54 | 70 | 630 | 404 | 455 | 555 | 455 | 546 | 661 | 592 | 672 | 820 | 16 | 40 | 31,500 | 92,500 | " | " | " | " | 7 | 10 |
| 26×56 | 70 | 522 | 398 | 472 | 575 | 457 | 533 | 650 | 563 | 659 | 804 | 18 | 40 | 36,000 | 93,600 | " | " | " | $2\frac{1}{2}$ | 7 | 10 |
| 26×60 | 65 | 650 | 418 | 502 | 612 | 470 | 564 | 688 | 602 | 693 | 845 | 18 | 40 | 34,000 | 94,000 | " | " | " | " | 7 | 10 |

*Distance of piston from end of stroke in inches.

## TABLE SHOWING PRINCIPAL DIMENSIONS AND HORSE POWER OF CORLISS ENGINES WITH DIFFERENT STEAM PRESSURES AND POINTS OF CUT-OFF—*Continued*

| Size of Engine | Revolutions per Minute | Piston Speed, Feet per Minute | Boiler Pressure 90 Pounds | | | Boiler Pressure 100 Pounds | | | Boiler Pressure 125 Pounds | | | Band Wheel | | | Weight of Engine and Fly-wheel Complete | Steam Lap | Steam Lead | Exhaust Lap | Trial Compression* | Pipe | |
|---|---|---|---|---|---|---|---|---|---|---|---|---|---|---|---|---|---|---|---|---|---|
| | | | Point of Cut-off | | | Point of Cut-off | | | Point of Cut-off | | | Diameter | Face | Weight | | | | | | Steam Diam. | Exhaust Diam. |
| | | | 1-5 | 1-4 | 1-3 | 1-5 | 1-4 | 1-3 | 1-5 | 1-4 | 1-3 | Ft. | In. | Pounds | Pounds | Inches | | | | In. | In. |
| 28×36 | 100 | 600 | 488 | 678 | 827 | 560 | 655 | 809 | 693 | 810 | 988 | 18 | 40 | 35,000 | 94,800 | 7/16 | 3/64 | 3/32 | 2¼ | 8 | 10 |
| 28×48 | 68 | 544 | 406 | 487 | 594 | 457 | 548 | 668 | 588 | 677 | 826 | 18 | 40 | 34,000 | 95,000 | " | " | " | " | 8 | 10 |
| 28×52 | 75 | 649 | 460 | 545 | 665 | 525 | 616 | 751 | 652 | 760 | 927 | 18 | 40 | 35,000 | 94,500 | " | " | " | 3 | 8 | 10 |
| 28×54 | 70 | 630 | 469 | 563 | 696 | 528 | 624 | 761 | 686 | 768 | 937 | 18 | 40 | 37,000 | 95,000 | " | " | " | " | 8 | 10 |
| 28×56 | 70 | 522 | 463 | 548 | 669 | 528 | 620 | 755 | 657 | 765 | 933 | 18 | 40 | 37,500 | 94,500 | " | " | " | " | 8 | 10 |
| 28×60 | 65 | 650 | 485 | 582 | 710 | 545 | 654 | 804 | 700 | 807 | 968 | 20 | 40 | 36,000 | 137,000 | " | " | " | 3½ | 8 | 10 |
| 30×36 | 100 | 600 | 488 | 678 | 700 | 560 | 655 | 795 | 693 | 810 | 970 | 20 | 40 | 37,600 | 138,000 | " | " | " | " | 8 | 10 |
| 30×48 | 68 | 544 | 466 | 559 | 682 | 542 | 629 | 773 | 674 | 776 | 931 | 20 | 40 | 38,000 | 140,000 | 1/32 | " | 3/16 | " | 8 | 10 |
| 30×52 | 75 | 700 | 528 | 626 | 765 | 599 | 710 | 862 | 752 | 876 | 1057 | 20 | 40 | 38,400 | 140,000 | " | " | " | " | 8 | 10 |
| 30×54 | 70 | 630 | 538 | 646 | 788 | 607 | 727 | 894 | 789 | 970 | 1164 | 20 | 40 | 39,000 | 141,500 | " | " | " | 3½ | 8 | 10 |
| 30×56 | 70 | 653 | 535 | 633 | 774 | 605 | 718 | 872 | 760 | 886 | 1070 | 22 | 40 | 38,000 | 144,500 | " | " | " | " | 8 | 10 |
| 30×60 | 62 | 620 | 531 | 637 | 777 | 597 | 717 | 882 | 770 | 886 | 1063 | 22 | 40 | 40,000 | 149,000 | " | " | " | " | 8 | 10 |
| 30×72 | 55 | 660 | 565 | 678 | 827 | 635 | 762 | 937 | 817 | 942 | 1130 | 22 | 40 | 41,000 | ..... | " | " | " | 3¾ | 8 | 10 |
| 32×48 | 75 | 600 | 555 | 658 | 802 | 628 | 745 | 905 | 790 | 920 | 1110 | 22 | 54 | 42,000 | ..... | " | 1/8 | " | " | 10 | 12 |
| 32×52 | 75 | 700 | 600 | 712 | 870 | 680 | 807 | 980 | 853 | 996 | 1195 | 22 | 54 | 43,200 | ..... | " | " | " | " | 10 | 12 |
| 32×56 | 70 | 653 | 608 | 720 | 880 | 687 | 814 | 990 | 862 | 1005 | 1216 | 22 | 40 | 44,000 | ..... | " | " | " | " | 10 | 12 |
| 32×60 | 62 | 620 | 604 | 725 | 885 | 680 | 816 | 996 | 975 | 1007 | 1208 | 22 | 40 | 45,000 | ..... | " | " | " | " | 10 | 12 |
| 32×72 | 55 | 660 | 643 | 772 | 926 | 723 | 868 | 1058 | 931 | 1073 | 1288 | 22 | 54 | 49,000 | ..... | " | " | " | 4 | 10 | 12 |
| 34×48 | 65 | 520 | 572 | 686 | 823 | 644 | 772 | 942 | 828 | 954 | 1145 | 22 | 54 | 53,500 | ..... | " | " | " | " | 10 | 12 |
| 34×60 | 62 | 620 | 682 | 818 | 981 | 767 | 920 | 1122 | 987 | 1137 | 1364 | 24 | 60 | 50,000 | ..... | " | " | " | 3¼ | 10 | 12 |
| 34×72 | 55 | 660 | 726 | 871 | 1045 | 817 | 980 | 1195 | 1051 | 1211 | 1453 | 22 | 54 | 53,000 | ..... | " | " | 7/32 | 3¾ | 10 | 12 |
| 36×48 | 62 | 496 | 611 | 749 | 899 | 688 | 825 | 1006 | 886 | 1020 | 1224 | 22 | 54 | 55,000 | ..... | 1/32 | " | " | 4 | 12 | 14 |
| 36×60 | 62 | 620 | 665 | 918 | 1101 | 860 | 1032 | 1259 | 1107 | 1275 | 1530 | 24 | 60 | 59,000 | ..... | " | " | " | 3¼ | 12 | 14 |
| 36×72 | 55 | 660 | 814 | 977 | 1172 | 916 | 1099 | 1318 | 1178 | 1357 | 1628 | 25 | 60 | 62,000 | ..... | " | " | " | 4 | 12 | 14 |
| 38×60 | 60 | 600 | 824 | 1007 | 1208 | 928 | 1113 | 1336 | 1183 | 1363 | 1636 | 25 | 60 | 68,000 | ..... | " | " | " | " | 14 | 16 |
| 40×48 | 70 | 560 | 852 | 1044 | 1253 | 959 | 1150 | 1380 | 1235 | 1422 | 1706 | 25 | 60 | 73,000 | ..... | " | " | " | 3 | " | " |
| 40×60 | 62 | 620 | 944 | 1133 | 1360 | 1062 | 1274 | 1529 | 1367 | 1574 | 1889 | 25 | 60 | 78,000 | ..... | 1/16 | " | 1/32 | 3¼ | " | " |
| 40×72 | 55 | 660 | 1005 | 1206 | 1447 | 1130 | 1356 | 1627 | 1455 | 1676 | 2011 | 26 | 60 | 84,000 | ..... | " | " | " | 3¾ | " | " |
| 40×84 | 50 | 720 | 1066 | 1305 | 1566 | 1199 | 1439 | 1727 | 1543 | 1777 | 2132 | 26 | 60 | 90,000 | ..... | " | " | " | 4 | " | " |
| 42×48 | 70 | 560 | 940 | 1151 | 1381 | 1057 | 1269 | 1523 | 1361 | 1567 | 1880 | 26 | 60 | 92,000 | ..... | " | 5/64 | " | 4¼ | " | " |
| 42×60 | 62 | 620 | 1041 | 1249 | 1499 | 1171 | 1405 | 1686 | 1507 | 1736 | 2083 | 26 | 60 | 94,000 | ..... | " | " | " | 3¼ | " | " |
| 42×72 | 55 | 660 | 1108 | 1330 | 1596 | 1246 | 1496 | 1795 | 1604 | 1847 | 2216 | 27 | .. | 96,000 | ..... | " | " | " | 3½ | " | " |
| 44×48 | 70 | 560 | 1031 | 1234 | 1481 | 1039 | 1393 | 1672 | 1494 | 1721 | 2065 | 27 | .. | 98,000 | ..... | 1/32 | " | 1/16 | 4 | 16 | 18 |
| 44×60 | 62 | 620 | 1142 | 1370 | 1644 | 1285 | 1542 | 1850 | 1653 | 1905 | 2286 | 28 | .. | 100,000 | ..... | " | " | " | 3½ | " | " |
| 44×72 | 55 | 660 | 1216 | 1459 | 1751 | 1368 | 1642 | 1970 | 1761 | 2028 | 2434 | 28 | .. | 102,000 | ..... | " | " | " | 4¼ | " | " |
| 46×60 | 62 | 620 | 1249 | 1499 | 1799 | 1405 | 1686 | 2023 | 1807 | 2082 | 2498 | 29 | .. | 104,000 | ..... | " | " | " | 3½ | " | " |
| 46×72 | 55 | 660 | 1329 | 1595 | 1914 | 1495 | 1794 | 2153 | 1924 | 2217 | 2660 | 29 | .. | 106,000 | ..... | " | " | " | 4¼ | " | " |
| 48×60 | 62 | 620 | 1360 | 1632 | 1958 | 1530 | 1835 | 2202 | 1969 | 2268 | 2721 | 30 | .. | 108,000 | ..... | " | " | " | 3½ | " | " |
| 48×72 | 55 | 660 | 1447 | 1737 | 2084 | 1628 | 1954 | 2345 | 2096 | 2414 | 2897 | 30 | .. | 110,000 | ..... | " | " | " | 4 | " | " |

*Distance of piston from end of stroke in inches.

but will not do so when set for starting. Reverse the extreme position of the eccentric and adjust the trip rod *C* as described for *B*.

Set the length of the dashpot rods so that when the swing plate is in its extreme position to the right, the cut-off toe of valve *K* is in the middle of both stops provided on its disengaging lever. The first stop is that which lifts the dashpot piston; the second stop is the one which will bring the dashpot piston to its lowest position in case it has not assumed it of its own accord, and when the swing plate is in its extreme position to the right, the cut-off toe of the valve *L* is in the middle of both stops on its respective disengaging lever. The dashpot should be well lubricated, being careful that the quantity supplied is not sufficient to choke the air passages, for by so doing the dashpot is liable to be broken when the dashpot plunger drops. The air-regulating valve should be adjusted so that the plunger will drop sufficiently to allow the latch hook to engage the cut-off toe upon the steam lever without striking the bottom of the dashpot. Should the plunger descend too quickly the valve should be regulated until the required speed is attained. When carrying steam full stroke (not cutting off), the regulating valves should be opened to relieve the steam valves from the additional strain transmitted by the dashpots.

If the governor is equipped with an oil dashpot, it should be kept full of a not too heavy oil. If this is neglected, the governor will have an irregular motion in jerks corresponding to the height of the dashpot not occupied by the oil. The tension of the governor belt should be sufficient to prevent any tendency to slip if smooth, regular running is to be assured.

When the various parts of a Corliss valve gear are in their proper adjustment, the reach rod should be of such a length that both the rocker arm and the wrist plate will be plumb when the eccentric occupies the central position, as in Fig. 56, and marks *A B* should be made on the hub and wrist-plate stud at this central position, as shown in Fig. 57. The eccentric should then be turned to one of its extreme positions. A temporary mark should be made here lightly as at *D*, Fig. 58. The eccentric should then be turned to the opposite position and another mark made at *C*. The distance from *B* to *C* should equal the distance from *B* to *D*. If there is any discrepancy the reach rod should be lengthened or shortened until the distance which the wrist plate travels on each side of the mark *B* is the same, when the rod will be of the proper length.

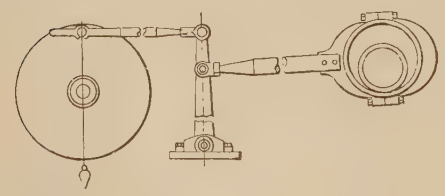

FIG. 56. — PLUMBING WRIST PLATE AND ROCKER ARM.

Disconnect rod and place the wrist plate in its central position. With

the wrist plate in this position and both steam valves hooked on, the valves should have the proper lap. This may be ascertained by removing the steam bonnets and inspecting the marks on the valves and seat made

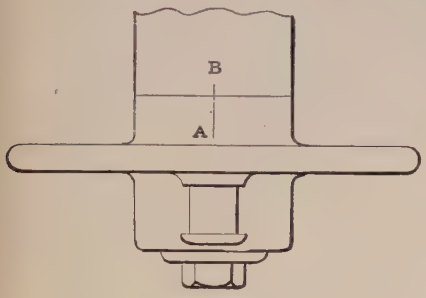


FIG. 57. — CENTRAL MARKS ON HUB OF WRIST PLATE.

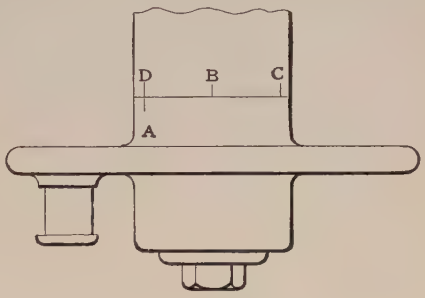


FIG. 58. — WRIST PLATE IN EXTREME POSITION.

by the builders, as shown in Fig. 59, where $F$ is the working edge of the valve, $E$ is the edge of the steam port and the distance $E\,D$ is the lap of the valve. The proper lap to give the valves can be found in the accompanying table, and the radial arms should be lengthened or shortened by means of the left- and right-hand thread connections until the lap is equalized and of the right amount.

Then turn the wrist plate to the extreme travel on the head and ad-

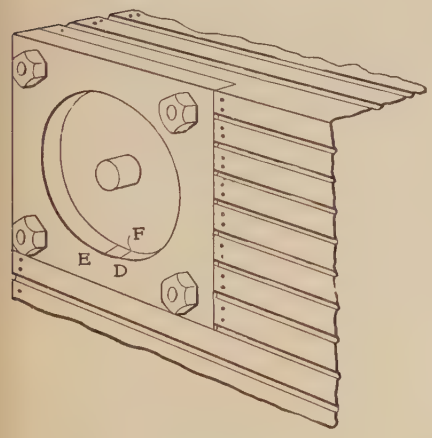


FIG. 59. — SHOWING MARKS ON VALVE SEAT.

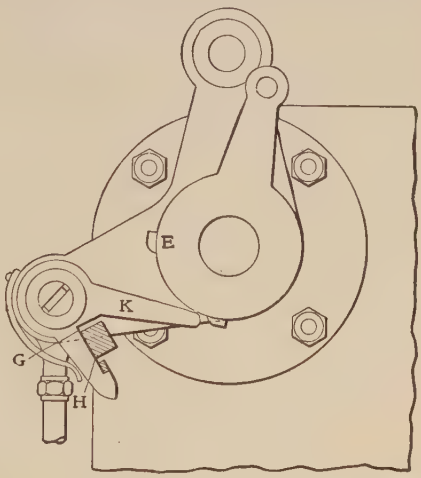


FIG. 60. — ADJUSTING CLEARANCE AT CATCH BLOCK.

just the length of the dashpot rod so there will be an equal clearance around the catch block, as shown in Fig. 60. Turn the wrist plate to the other extreme and adjust the other dashpot rod in the same manner.

Next with the governor in its lowest running position resting on the collar or pin provided for the purpose, turn the wrist plate so as to pick up the head-end steam valve and then turn it over until it nearly reaches the mark corresponding to its opposite position, and adjust the governor rod for the head-end valve so that the trip block *E*, Fig. 60, just engages the inner member of the hook *K*, making sure that the valve will be released when the wrist plate reaches its extreme position. The same adjustment should now be made at the crank end of the cylinder. The governor should then be blocked up to its highest point of travel, when the trip blocks should be in such a position that neither steam valve can be lifted by the hook.

Next put the governor down to its lowest running position and turn the engine to the dead center nearest the cylinder. Hook the reach rod on the wrist plate and turn the eccentric around in the direction the engine is to run until the hook has engaged the head-end steam valve and raised it sufficiently to open the port to the amount of the lead as shown in the table. Fix the eccentric at this point, then turn the engine over in the direction it is to run until the crosshead is at a point determined from the column of trial compressions given in the table, and which varies from $1\frac{3}{4}$ to 4 ins., according to the size of the engine, and examine the crank and exhaust valve. The line indicating the edge of the port and edge of the valve should exactly coincide. If they do not, adjust the length of the exhaust valve rod as the case requires until the marks are together.

Continue turning the engine until the crank end dead center is reached, making sure that the head-end steam valve has been released, and see if the cra and valve has been opened to the amount of the lead. If not, make any required adjustments in the length of the radial area operating the crank and steam valve. Continuing turning the engine until the crosshead is within the same distance from the end of the return stroke as in the first instance, corresponding to the amount of trial compression, and adjust the position of the head and exhaust valve so that the lines will coincide, as was done at the opposite end of the cylinder. Make sure that the crank-end steam valve is released by the time this stroke is completed, and the valves will be properly set, but should, of course, be verified by the indicator. This method applies to a single eccentric engine, but the same process can be used in the case of the steam valves on double eccentric engines except that when the wrist plate is in its central position and both steam valves are hooked on, the valves should give about one fourth port opening on each end instead of lapping, as in the case of a single eccentric engine, and very little lap should be allowed when the dashpots are down to their extreme positions—only enough, in fact, to make the valves steam tight.

Centralization of the valve gear is accomplished in the same manner as for single eccentric engines, but the steam and exhaust valves are, of course, set separately. When setting the steam eccentric, the style of wrist plate operating the steam valves determines whether the eccentric should be moved in the same direction as the crank or in the opposite direction, when giving the valves lead. In any case, this may be determined by an inspection of the style of gear employed. In the same manner, an inspection of the valve gear must be made to determine in which direction to turn the eccentric when adjusting the exhaust valves at the point of closure or compression. If the exhaust wrist plate is moved by an attachment above its point of support, as with the steam valves, the eccentric must be moved in the direction in which the engine is to run, and the position of the eccentric will be nearly that of the steam eccentric. If the point of attachment of the exhaust reach rod is below the point of support, the eccentric must be moved in the opposite direction to that in which the engine is to run.

## VI

## THE GREENE–WHEELOCK ENGINE

The Hill valve with Greene cut-off is on all makes of the Greene-Wheelock engine of to-day. In the first years of its maintenance this engine was installed extensively in Canada, England, France, and Germany, as well as in this country, where more than one thousand were put in service by the original builders. Successive builders have improved the type all the while, steadily placing them in service, and to-day thousands of these engines are in use in this and foreign countries. For this reason, and because this valve gear is interesting to operators, this chapter is written to bring out the principal points to be considered in the setting of the valves.

Each cylinder is equipped with four valves of the Hill grid-iron type, two steam and two exhaust to each cylinder, each individual valve being driven by a separate eccentric. The valves are arranged two each in a plug, there being one steam and one exhaust in each plug, and one plug at each end of the cylinder.

The best-known advantages of this valve and gear are large port openings with a minimum of travel, which in connection with the Greene cut-off on the steam and the toggle motion on the exhaust valves gives the quickest action at the right time to both. A minimum lap is also obtained with the aid of the gear, an added reason why it is of first importance to understand the movements of the valve and gear and to use care in all adjustments.

The valve plugs contain the valve seats as an integral part of the plug, which are in turn removable for repair, together with the valves when in position, and to the plug is attached the head which holds the working parts of the valve mechanism. The whole makes a complete removable structure, separate from the cylinder, which can be disconnected from the eccentrics and removed from the cylinder in a few minutes for inspection, repair, or permanent replacement.

The arrangement of the valves below the cylinder is the Wheelock system. The advantages are short ports, small clearance, together with a means of discharge of the water of condensation through the exhaust without entering the cylinder, and if in extraordinary cases water collects in

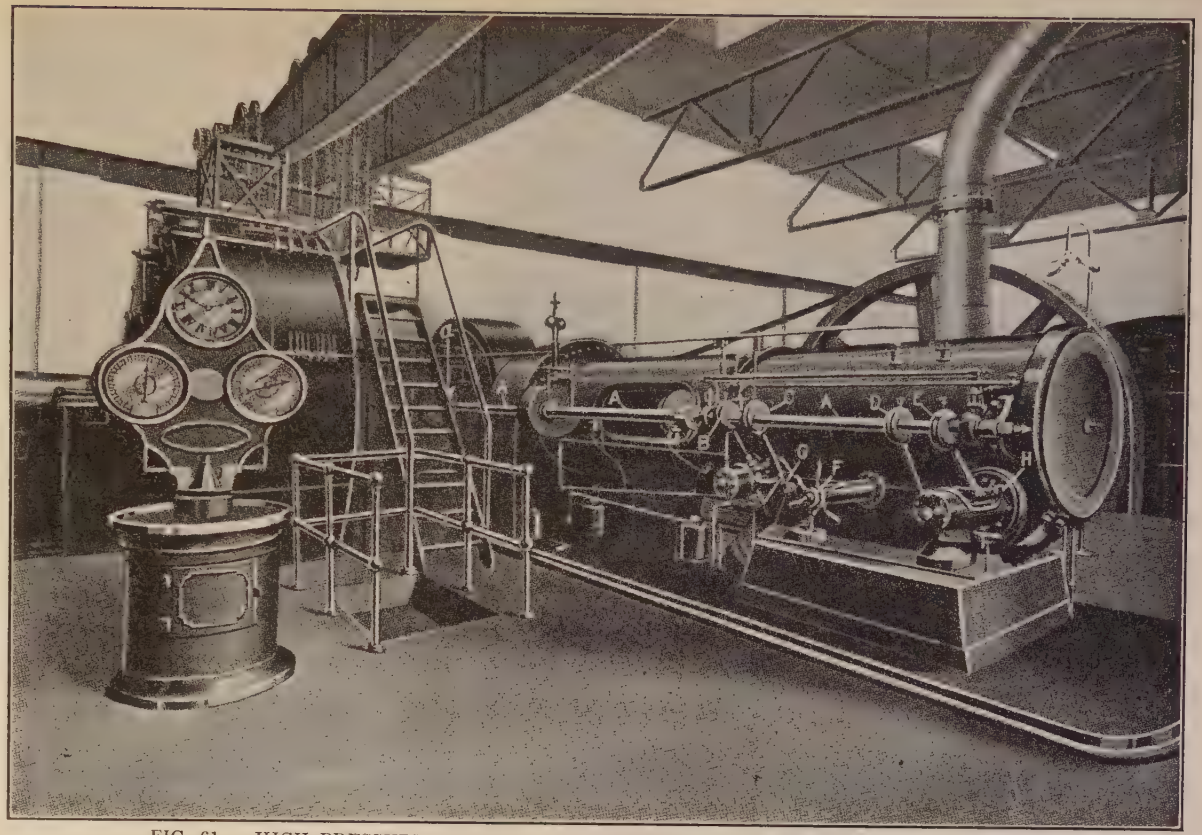

FIG. 61. — HIGH-PRESSURE SIDE OF GREENE-WHEELOCK CROSS-COMPOUND ENGINE.

the cylinder it is relieved by the raising of the inlet or steam valve from its seat.

### General Arrangement of Valve Gear

The general arrangement of the valve gear, eccentrics, etc., can be seen by reference to Fig. 61, which is the high-pressure side of a cross-compound engine. The eccentric shaft *A* being geared to the main shaft of the engines at *a* makes it positive in action. The eccentrics which actuate the valves are at *B*, *C*, *D*, and *E*. These eccentrics are secured to the shaft by a friction key, which is hidden by a plate on the side of the eccentric,

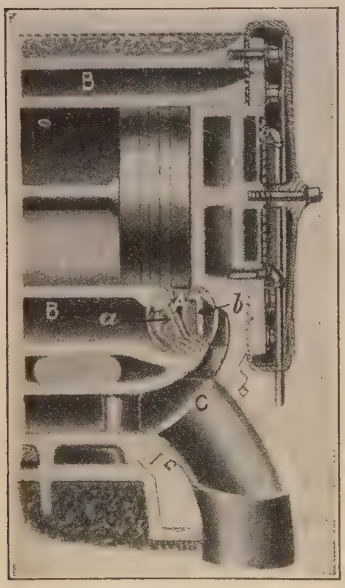


FIG. 62.

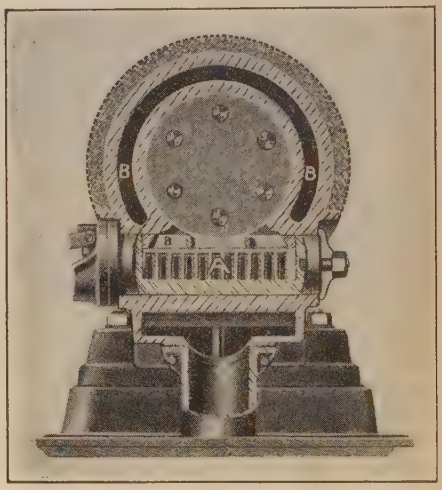


FIG. 63.

secured in place by screws. The eccentrics *C* and *D* are the steam eccentrics and *B* and *E* the exhaust. They are attached to the valve mechanism by their respective rods. The throttle of the engine at *F* admits steam to the steam chest under the cylinder and equally to the valve plugs *G* and *H*.

An understanding of the valve plugs and their location may be had by reference to Figs. 62, 63, and 64. Fig. 62 shows a longitudinal section of the cylinder and the cross section of the valve plug at *A*. This view gives the location of the inlet (steam) valve and seat at *a* and the outlet (exhaust) valve and seat at *b*, the steam chest *B B* forming a jacket for part of the cylinder, as well as admitting the steam through the inlet *a* into the cylinder. From the cylinder the steam passes out through the outlet *b* into the exhaust passage *C*.

Fig. 63 is a cross section of the cylinder through the clearance space and a longitudinal of the valve plug in that end of the cylinder, showing the back of the inlet valve seat, with the outlet valve cut away.

Fig. 64 is a view of the valve plug with all the parts assembled. This view shows the inlet- or steam-valve side of the plug. The inlet valve is at *a*; the spring which holds it to its seat when not under steam pressure is at *b*; and *c* is the pusher crank which actuates the valve by means of a cam at *d*, which comes in contact with the latch of the valve-stem head *e*. This is fastened to the inlet valve-stem by clamp bolts. The inlet valve-stem screws into the nut *f*, so that by loosening the clamp bolts

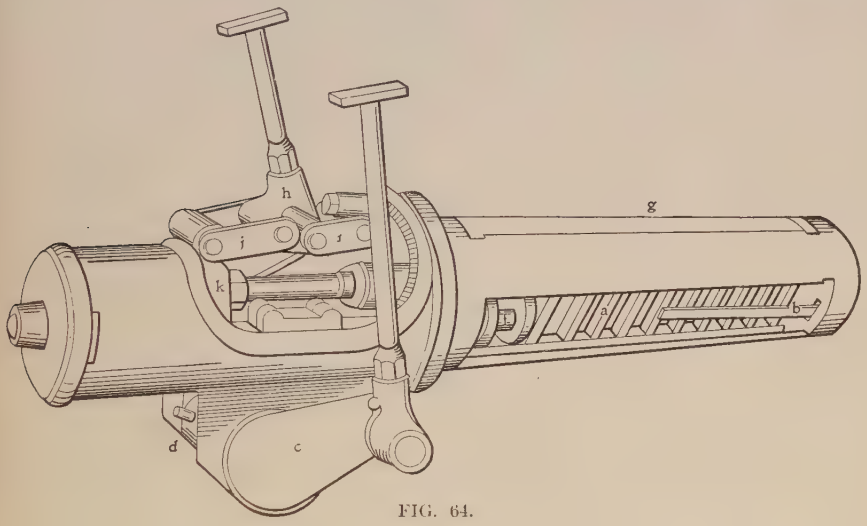


FIG. 64.

of the head *e* and turning the rod, an adjustment of the valve setting can be made, as will be shown later.

The inlet valve is opened by the pusher cam pushing it forward, but is released from this cam through the means of a trip cam on the bottom of the valve-plug head, which is connected to the governor rods. When released by the trip cam, the valve cuts off by means of the steam pressure on the valve stem controlled by a dashpot arrangement in the valve-plug head, to which the other end of the rod is attached.

The outlet valve is inside of the valve plug under the strut *g*. The position of this valve in relation to the inlet can be noted by reference to Fig. 62, where the cross section of the valves and seats is shown. The outlet valve is actuated by the eccentric acting on the toggle joint *h*, connected between the two pairs of links, from the point *i*, where it is fixed, and the point *j*, where the link is fastened to the valve-rod head *k* on the outlet valve stem.

## Position of Valves in the Plugs

A more thorough understanding of these valves may be obtained if the position of the valve inside the plug (in relation to the position of the eccentric and other mechanism) is known.

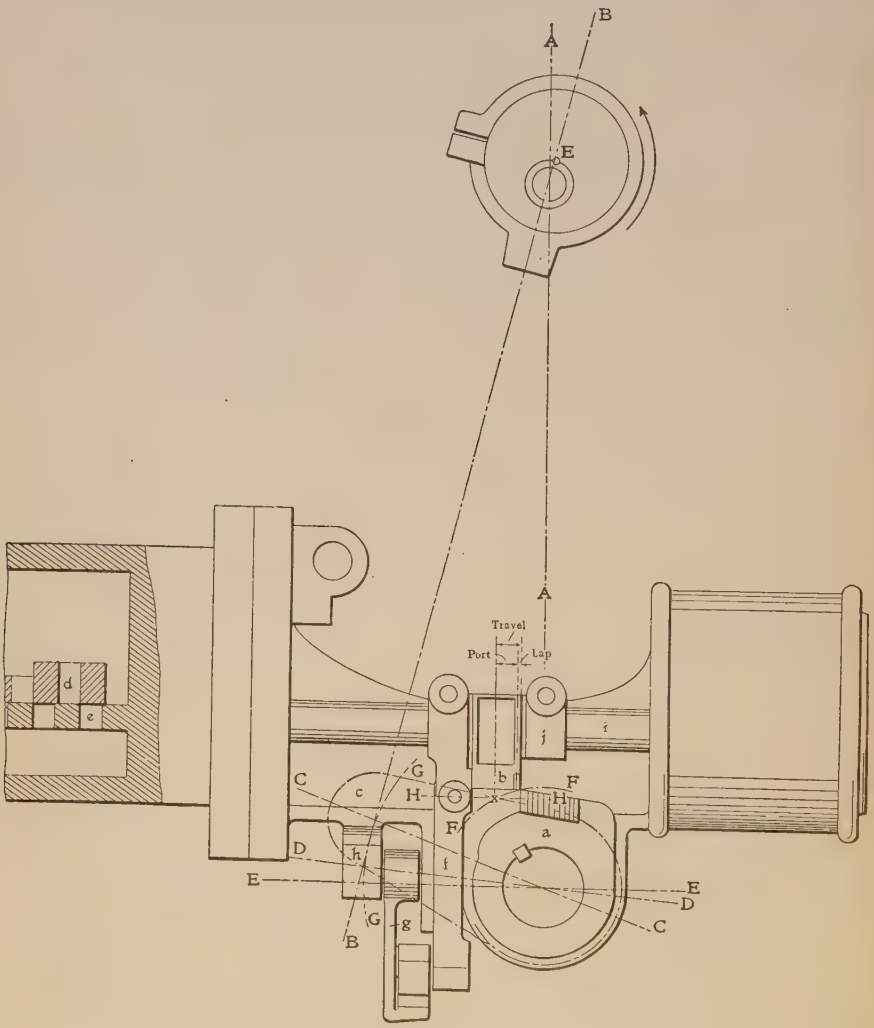


FIG. 65.

For the sake of simplicity, each valve, i.e., outlet and inlet, is shown with its gear separate for the moment, eliminating one while the other is under consideration. The cross section of the valve and seat is not in

proper relative position, but so placed in these figures as to best show the positions at given points of the eccentric travel.

Fig. 65 represents the inlet (steam) valve and mechanism assembled. The scale is for a size these makers build for cylinders under 16 in. in diameter, or their "size A" valve. It shows the valve lapped at the inner end of its travel, with the eccentric at the top center of its travel.

Referring to the illustration, then, *A A* is the center line of the eccentric shaft, *B B* is the center line of the eccentric rod, *C C* is the center of

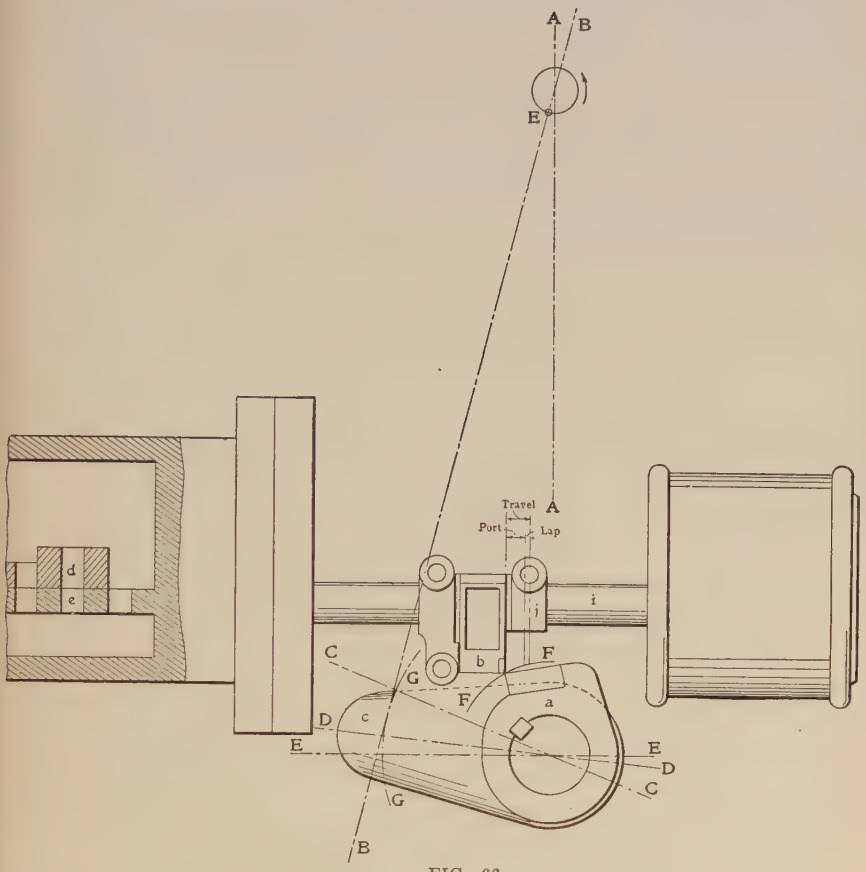


FIG. 66.

the pusher crank at the top of its movement, *D D* is the pusher-crank center at the lower end of its travel, *E E* is the center line of the pusher-crank shaft, *F F* is the line of travel of the pusher-plate edge, *G G* is the line of travel of the pusher-crank pin, *a* is the pusher, *b* is the latch, *c* is the pusher crank, *d* is the valve, *e* is the valve seat, *f* is the lifter, *g* is the trip cam, *h* is the trip-cam yoke, *i* is the valve stem and *j* is the head.

It will be noticed that the pusher *a* just engages the edge of the plate on the latch *b*, with the pusher crank *c* at the top end of its travel and the eccentric the same. Whenever the eccentric, pusher crank, and pusher are in the position here shown, the valve *d* should be lapped over the ports of the valve seat *e* as shown.

When the latch *b* and the pusher *a* just engage at the point shown, the lifter *f* is raised by the trip cam *g* to the highest working position, and the valve will not open. In order to open full port, the lifter must lower the latch so that its bottom edge will be along the line *H H* and the pusher plate can engage it up to the point *X*, where it will have the valve open full port, as shown in Fig. 66, which shows the essential parts to note of the same gear as in Fig. 65. The same letters are used to denote the same parts as in Fig. 65.

By reference to the eccentric circle it will be noted that the eccentric is at *E*, or the bottom of its travel, and the pusher crank the same. The latch *b* has been allowed to fall to the position along the line *F F* in Fig. 65, and so the pusher has moved everything along to the outside end of the valve travel where the ports are full open and the valve is on the point of being released to cut-off.

Fig. 67 is a detail of the trip cam *g* (Fig. 65). This cam is connected to the governor rod at *A* and pivots on its pin at *B* in the cam yoke. When the governor is on its stop before coming up to speed the roller of the lifter is as shown for "full stroke" and the valve will be carried in full-port opening, as in Fig. 66, before releasing for cut-off. After the engine is up to speed and the governor lifted from its stop, the cam will be moved along in the direction that will bring the lifter roller at any point up to that shown for "short cut-off." When the roller reaches there, the valve is traveling only enough to overcome the lap. If the engine slows down and the stop is not set, the governor will go low enough to throw the trip cam over so that the lifter roller is up to "safety," when the valve will not travel at all, the latch being lifted so high it will not come in contact with the pusher plate, as in Fig. 65.

A mark is put in the edge of the flange of the trip cam, as at *C*, Fig. 67, and this mark should come under the center of the lifter roller, as shown, when ready to start up or carry full stroke. (Note the rules for adjustment given later.)

Fig. 68 shows the outlet (exhaust) valve and plug with the valve gear assembled. This first view shows the valve wide open to ports on the outside end of its movement. It will be noted that the eccentric is on the bottom center of its travel and the toggle stub end *a* is at the lowest point it reaches below the line *C C*, and the outlet valve-stem head center *b* has reached its farthest point of travel toward the valve plug.

In Fig. 69 the eccentric has reached *E* on the eccentric circle and the

FIG. 67.

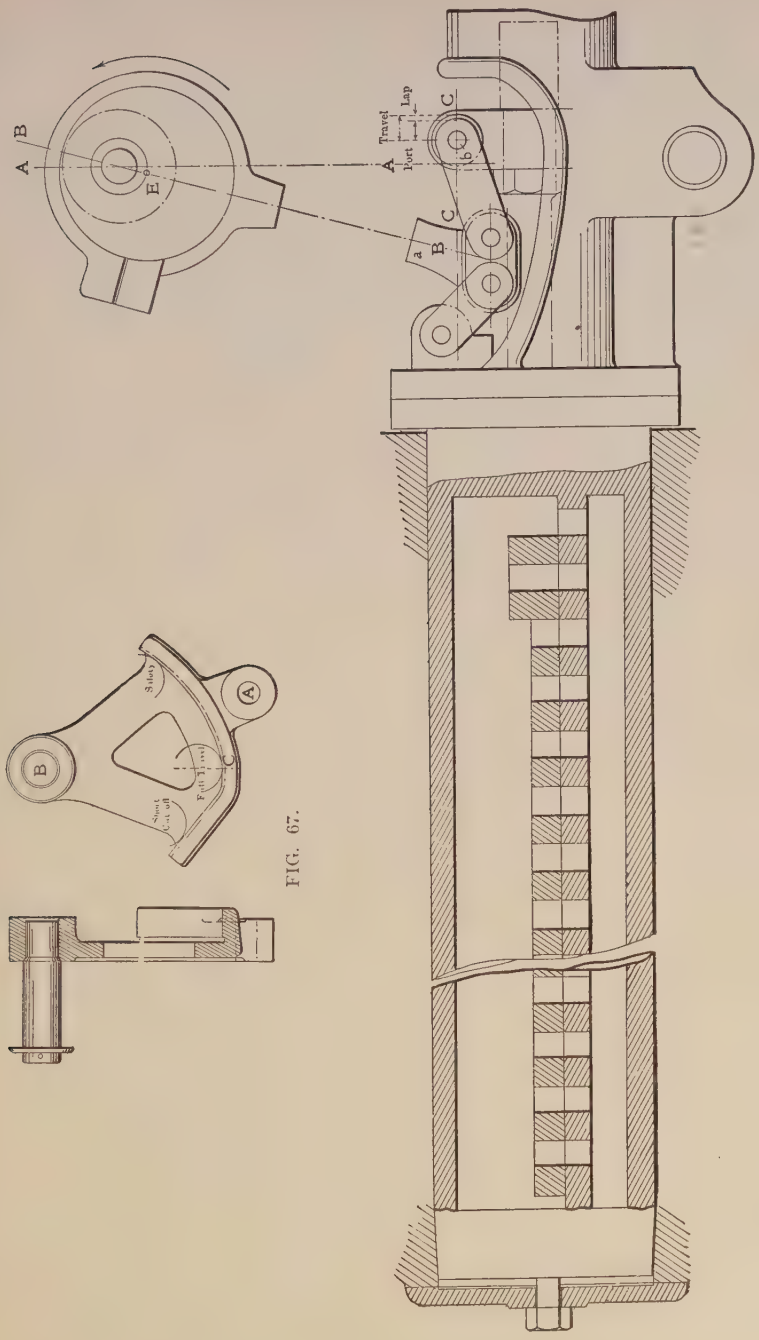


FIG. 68.

toggle stub end has come up toward the line $C\,C$; the point $b$ has reached a position corresponding to the near edge of the ports and the valve has just cut off or closed for compression.

In Fig. 70 the eccentric has reached the point $E$ on its travel, and the toggle links now forming a straight line from the end of one to the end of

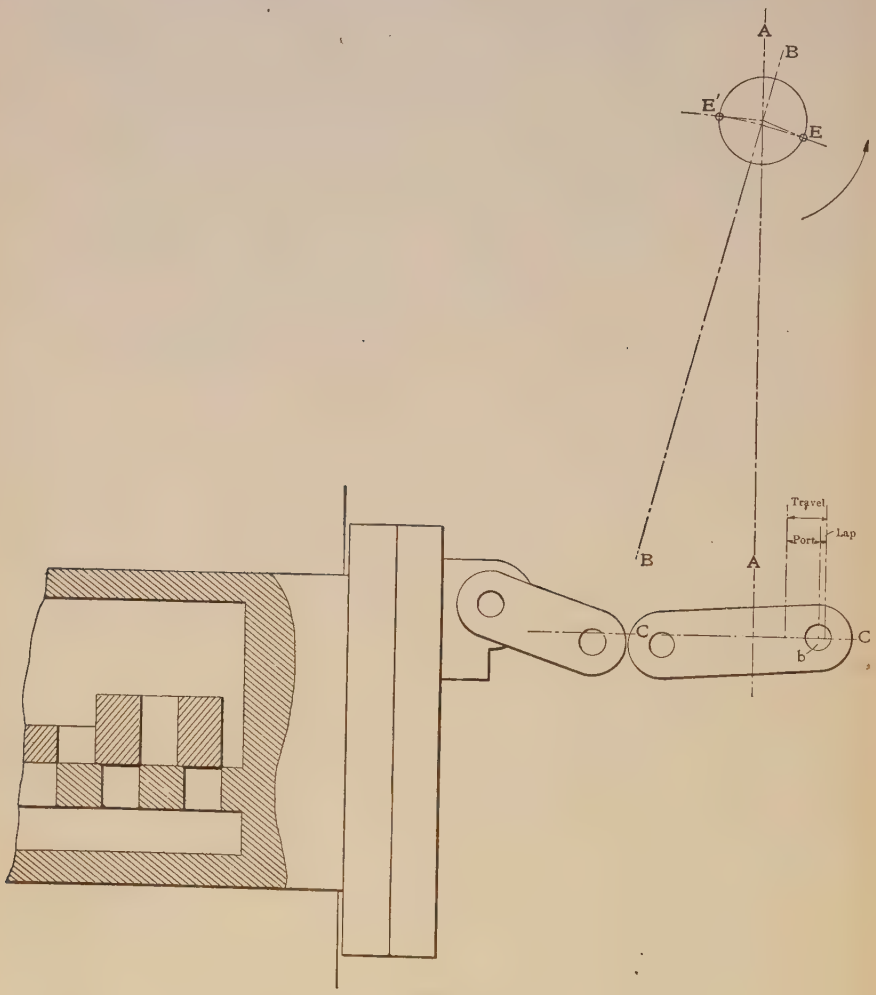


FIG. 69.

the other, the valve is lapped as shown with the point $b$ where it is. This is the extreme of travel for the valve and stem in this direction.

In Fig. 71 the eccentric has reached the point $E$, the top center of its travel, and the toggle stub end the same, but the point $b$ has come back on its travel, as well as the valve, until they nearly open again. The eccentric

continuing until it reaches $E'$, in Fig. 70, the point $b$ and the valve will have again lapped, and continuing until it reaches $E'$, Fig. 69, the valve will have come back to the position shown, or is on the point of release.

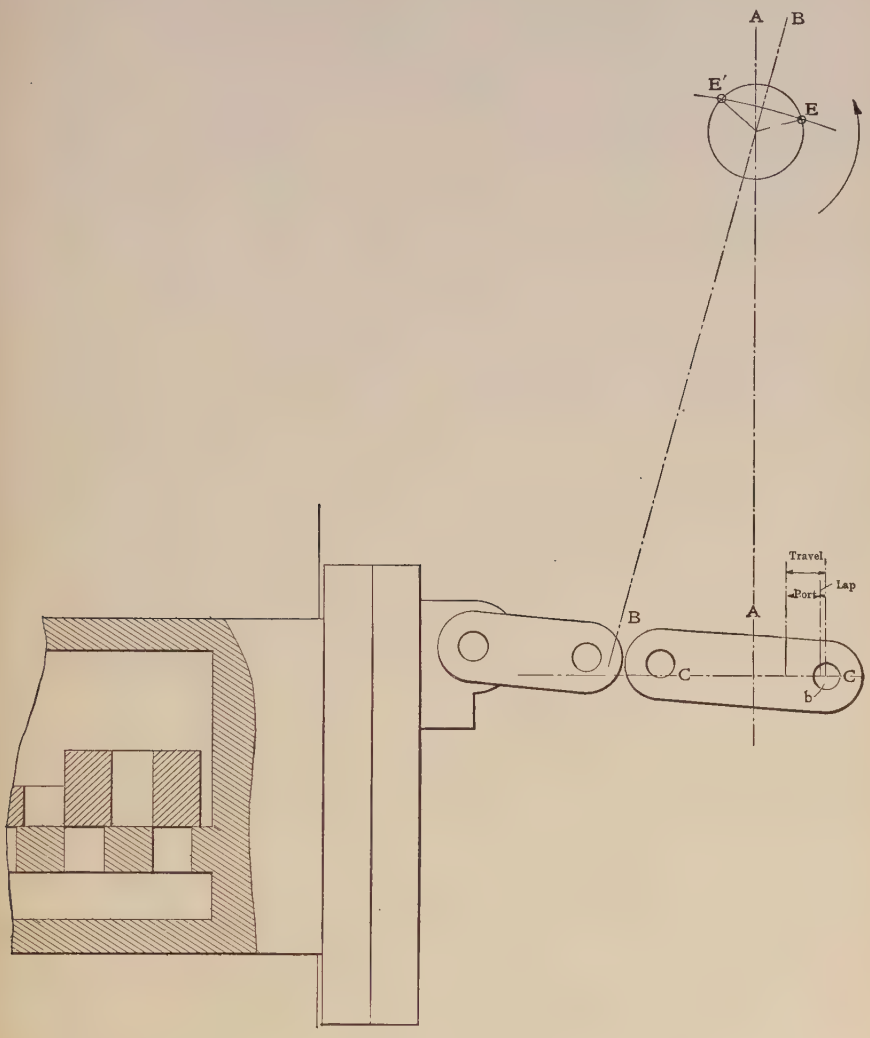


FIG. 70.

It will be seen by this that the valve moves four times between the points of closure and opening, which is a distinctive feature of this valve.

### Conditions to be Avoided

There are some general conditions which if they existed on this valve gear would cause trouble, and it is well to speak of these. If the inlet

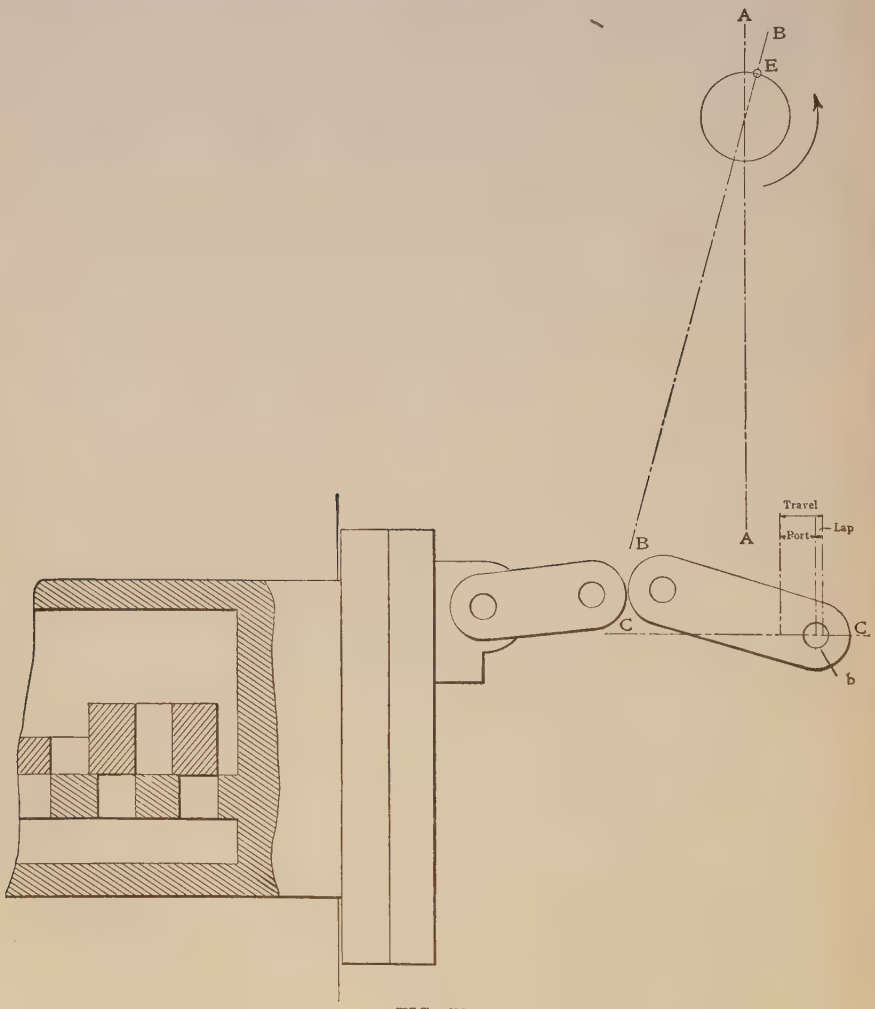


FIG. 71.

eccentric rod is too long, the valve-stem latch and pusher may not engage, or if they do, the action may be too early. If the rod is too short, it will cause late action.

If the outlet eccentric rod is too long it will cause the valve to open too quickly, and running back too far will partially obstruct the ports and it

will close late. If too short, the opening will be late and the closure early, with a reopening on the back travel.

The eccentrics in these illustrations run in the direction of the arrows, but also run opposite to suit the conditions, any change of the position of the eccentric on its shaft has the same effect as though the eccentric were on the main shaft.

## Instructions for Proper Setting

The following instructions are from the builders of these engines, and if adhered to will give proper setting of the valves. The preceding illustrations will aid to a full understanding of these operations.

For reference and a means of checking off the action of the valves it is stated that "A-size" valves have $\frac{5}{32}$-in. lap, with $\frac{3}{4}$ in. travel, and are generally used on cylinders up to and including 16 ins. in diameter; "B-size" valves have $\frac{3}{16}$-in. lap, with $1\frac{1}{8}$-in. travel, and are generally used on cylinders from 18 to 26 ins. in diameter, inclusive; "C-size" valves have $\frac{1}{4}$-in. lap, with $1\frac{3}{8}$-in. travel, and are used on cylinders from 28 ins. in diameter upward.

When starting to adjust the valves, first have all eccentrics loose on the cylinder shaft, and, second, determine the direction the cylinder shaft is to run, and always rotate the eccentrics in the same direction, whether loose on the shaft, or when the shaft and eccentrics turn together.

## To Adjust the Travel of the Steam Valves

On the edge of the pusher crank (Fig. 72) a line is made in the shop, and on the side of the plug head, next to the pusher crank, a corresponding line is made (where the arrow points). When the line on the pusher crank corresponds exactly with the line on the side of the plug head, the pusher plate is vertical, as in Fig. 65. This is its most backward position.

Adjust the eccentric rod for this valve to such a length that in turning the eccentric around on the shaft the line on the edge of the pusher crank comes back to correspond exactly with the line on the plug head at each revolution. Then, by shimming, adjust the bridge-supporting trip cam (shim where the arrows in Fig. 73 denote), so that the steam valve will travel $\frac{3}{4}$ of an inch on "A size," $1\frac{1}{8}$ ins. on "B size," and $1\frac{3}{8}$ ins. on "C size," but bear in mind that the valve must trip at the end of its travel and the bridge must not be so low that the valve will carry the full stroke without tripping. The roller of the lifter must be in position for full travel, as shown in Fig. 67.

## To Set the Steam Valves

On the steam-valve stem four scratch lines are made. These lines represent the valve on its lap, the valve just opening, the valve wide open, and the valve pushed in until it strikes the plug. With each valve gear a steel-wire tram (*a*, Fig. 74) is sent. Just above the valve stem on the plug-head casting a prick-punch mark will be found. Loosen up the inlet stem head (*j*, Fig. 65) on the stem, then shove the valve back until it strikes the plug. If the valve is set correctly, the tram with one end in the mark on the plug-head casting, as shown in Fig. 74, should with the other end meet the first scratch line on the valve stem (nearest the outside end of stem). If the point of the tram does not coincide with this

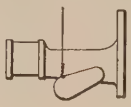

FIG. 72.

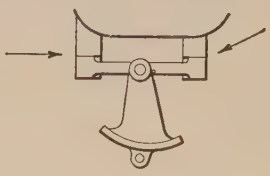

FIG. 73.

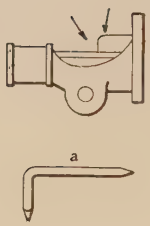


FIG. 74.

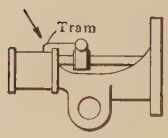


FIG. 75.

line, the valve stem should be screwed in or out until it does. The valve should then be let back so that the dasher strikes the head, and the inlet stem head be brought back against the pusher plate when the pusher plate is vertical, as in Fig. 65, leaving $\frac{1}{64}$-in. clearance between the pusher and latch plates. It will then be found that the point of the tram will correspond with the fourth mark on the stem, with the valve closed, as in Fig. 65.

When the valve is moved forward so that the tram point corresponds with the third line on the stem, the valve is just closing or opening, and when moved farther so that it corresponds with the second line, the valve is wide open. The travel of the valve should be between the second, third,

and fourth points spoken of, and it should trip just as the tram point corresponds with the second line from the outside end. Then, with the piston on dead center, the eccentric should be revolved on the shaft to bring the steam valve $\frac{1}{32}$ of an inch open on the crank end and $\frac{3}{64}$ of an inch on the head end. The eccentric should then be clamped to the shaft, and the valve is set.

### To Adjust the Exhaust Valves

On the outside of the plug head, where the arrow points in Fig. 75, are four prick-punch marks. On the outside of the outlet stem head where the tram rests is another prick-punch mark. This is for one point of tram.

### To Adjust Valves for Lap

The eccentric rod should be disconnected from the eccentric. Shove the valve back as far as it will go. With the valve in this position, the outside end of the tram should fall into the fourth mark on outside of the plug head nearest the cylinder. If it does not, loosen up the nut holding the outlet stem head, and screw the stem in or out sufficiently to make the tram come up into the fourth mark. Then tighten up the nut holding the outlet stem head, connect the eccentric rod to the eccentric, lengthen or shorten this eccentric rod so that the travel of the valve due to one revolution of the eccentric will move the tram from the first to the third prick-punch mark, and no farther.

The eccentric should then be set so that when the piston is about 5 ins. from the end of the return stroke, the exhaust valve should have just closed, as in Fig. 69, and the tram point would fall into the second mark on the plug head.

As these valves must be set while the valves are out of sight, a strict adherence to these rules of adjustment must be followed, care being taken to be accurate, but Figs. 65, 66, 67, 68, 69, 70, and 71 will help to a clear understanding of what is done in this adjustment and subsequent operation.

## VII

## THE BROWN ENGINE

The engine is provided with two steam valves and two exhaust valves of the flat multiported type, each set being operated by a separate eccentric and all independently adjustable. The steam valves are placed on the

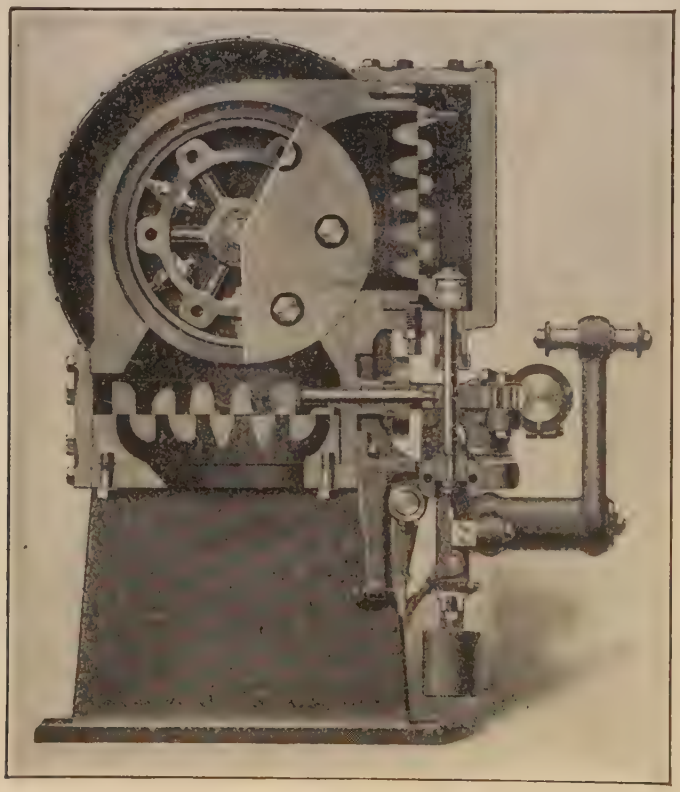

FIG. 76.

side of the cylinder and the exhaust at the bottom, the latter affording an ideal water drain, as shown in Fig. 76, which is a section through the valves and cylinder. The operation of the steam valves can best be

seen by referring to Fig. 77, which shows the position occupied by the parts at the commencement of the piston stroke. The eccentric is connected to the steam lever *B*, on the lower arm of which is the steel lifting block *A* which has just engaged the latch *C*. This is journaled on a pin on the guide *D* of the steam-valve stem.

It is evident that if the eccentric draws the arm *B* toward the crank shaft the block *A* will be raised and carry with it the latch and guide, causing the valve to open. This upward movement continues until the

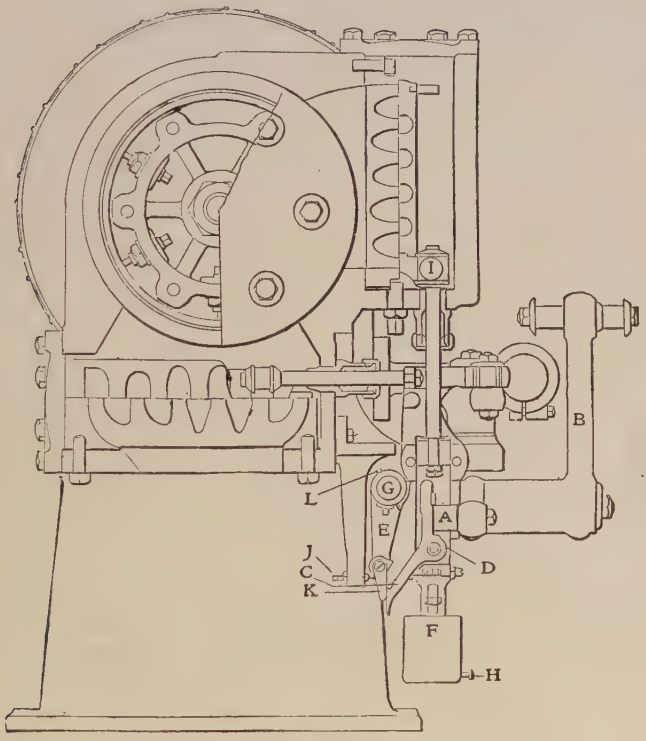


FIG. 77.

tail of the latch comes into contact with the trip lever *E*, which causes the latch to release the block and allows the valve, with the stem and guide, to fall to their initial position, thus cutting off suddenly the admission of steam. A steam pressure equal to that on an area equal to the valve stem also assists to close the valve, whose fall is cushioned by the dashpot *F*, the amount of cushion being regulated by the cock *H*. The trip lever *E* is carried by the trip shaft *G*, which is connected to and actuated by the governor.

The action of the exhaust is shown in the plan view, Fig. 78. The exhaust sliding bar *A* is actuated by the eccentric and is connected by

the link $B$ and the lever $C$ to the exhaust-valve stem guide $D$, which is connected to the valve by the stem $E$. The manner of transferring the motion of $A$ to the valve is quite apparent, but it should be noticed that the arrangement gives the greatest velocity of valve movement at the points of opening and closing and provides a long dwell between these points.

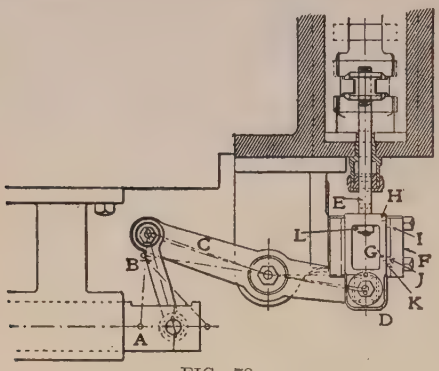


FIG. 78.

The governor now provided with these engines is of the type shown in Figs. 79 and 80, the first showing the construction of the governor and the second its relation to the trip shaft and other parts of the engine.

The centrifugal action of the two weights $A$ and $B$, Fig. 79, is resisted by the springs, but their outward motion rotates the sleeve $C$, which has a diagonal slot in which is fitted a roller $D$ on a pin fast to the central stem $E$. The central

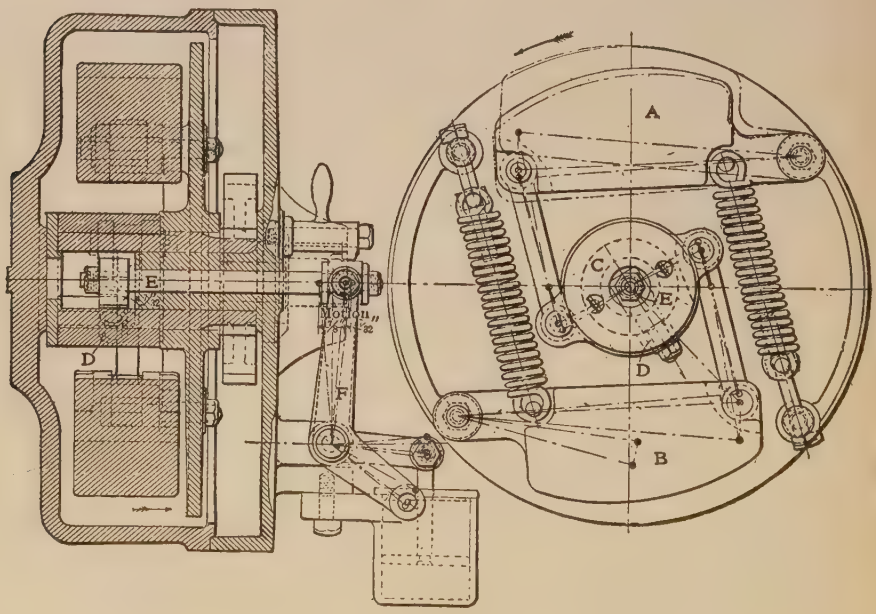


FIG. 79.

stem is by this action forced to the left in the direction of its length, and this moves the double lever $F$ to which the stem is connected out-

side the governor case. The connection of the double lever $F$ to the trip shaft is shown in Fig. 80, in which is also shown the connection to the dashpot, and a stop, with the handle in a vertical position, for checking the outward motion of the stem. From the description of the action of the steam-valve gear, it is evident that a rotation of the trip shaft causes the trip lever $E$, Fig. 77, to release the latch earlier or later in the stroke, according to the load, and so vary the point of cut-off. An extra movement of $\frac{7}{32}$ in. of the stem beyond its extreme governing

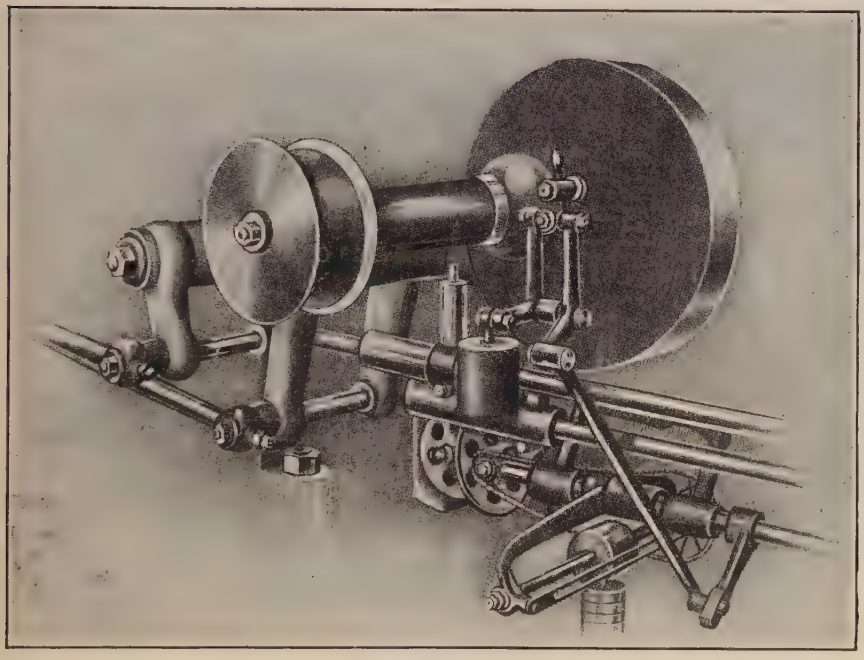

FIG. 80.

position operates a safety stop which does not allow the latch to engage the lifting block and causes the steam valve to remain seated and so shut off steam completely. Its mode of operation will be apparent from what follows.

It is seen that this gear has the quick opening and release features, and the use of separate eccentrics for the steam and exhaust valves allows separate adjustment for each and permits of a wide range of cut-off and compression. The directions for setting the valves may be stated as follows:

The first requisite is the proper adjustment of the four valve stems to secure the necessary lap on each valve.

Beginning with the steam valves, remove the guide box $A$, Fig. 81,

and on the valve-gear bracket a scratch mark *B*, prick-punched at each end, will be found. Now disconnect the dashpot connections from the steam-valve stem guide *D* and allow the valve to drop as far as it will go, and then adjust by turning the valve stem in or out of the valve nut until the distance between the scratch mark *B* on the valve-gear bracket and the bottom of the brass drip cup *C* is the exact width of a steel gauge, or $\frac{1}{8}$ in. Then make the stem fast to the guide by means of the nuts at *E*.

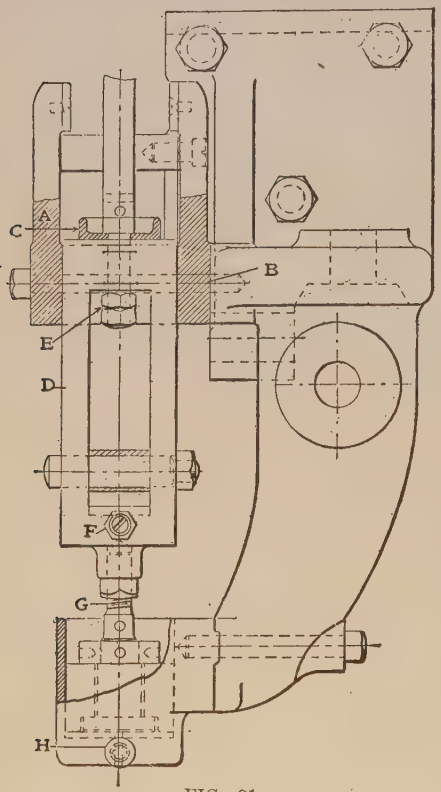

FIG. 81.

The dashpot stem *G* should then be adjusted until the top prick-punched scratch mark on the guide *D* just shows above the top of the guide box. Tighten the nut on the dashpot stem. Make these adjustments on both steam valves. Now turn the full side of the steam eccentric on the forward or dead center farthest from the cylinder, having first seen that the dashpot on the crank-end steam valve is properly seated. When the eccentric occupies the dead center, the lifting block *A*, Fig. 77, on the crank end should then have just engaged the latch, with perhaps $\frac{1}{32}$-in. clearance. If this is not the case, the eccentric rod should be adjusted until this clearance is obtained. When the eccentric occupies the dead center nearest the cylinder, see that the foregoing conditions are fulfilled at the head or end of the cylinder farthest from the crank shaft. If such is not the case, adjustment must be made by the right and left rod connecting the two steam levers until the proper clearance is obtained on the head end.

Now have the eccentric turned around on the shaft and see that both valves are alternately raised an equal distance, which will be the case if the adjustments have been properly made.

Place the crank and the full side of the eccentric on the dead center nearest the cylinder. The lifting block should have now just engaged the latch on the head end. Have the eccentric turned around on the shaft

in the direction in which the engine is to run until the valve opens the ports the amount of the lead, which should not exceed $\frac{1}{64}$ in., unless it is positively known that the engine will run better with more lead. Have the eccentric fixed to the shaft at this point. The amount of lead may be accurately determined by removing the upper head of the valve chests and measuring the lead by means of pieces of thin steel $\frac{1}{64}$ in. thick. The end of the steel strip is to be placed against the valve seat while the eccentric is being slowly turned around on the shaft. As soon as the strip enters the port the valve will have opened $\frac{1}{64}$ in.

Have the crank turned, in the direction it is to run, to the opposite dead center or crank end.

The opposite steam valve should now have opened the port the amount of the lead, which it will do provided the work of equalizing the movements of the valves has been properly done. If the lead is found to be correct, the eccentric must then be permanently fixed in the position in which it will now be found on the shaft.

The movement of the exhaust valves is now to be equalized in the same manner as for the steam valves. Marks will be found on the exhaust-valve stem guide *D* and guide box *F*, Fig. 78, showing the position of the valves, or should the marks have become obliterated, the valves may be seen by removing the valve-chest bonnets, and by the aid of pieces of thin steel their exact location may be determined, the same as with the steam valves.

To determine the proper length of the exhaust-valve stem, draw the valve forward until it strikes. Screw the valve stem into the valve nut until the marks *II* and *I* come together, then make the nut fast at *L*. The lines *J* and *K* show the lap of the valve. *G* and *J* when together show the opening line.

To set the exhaust valves, mark the guides on the frame at each end, varying from $2\frac{1}{2}$ ins. for the small engines to 3 or $3\frac{1}{2}$ ins. for the larger ones, from the full stroke of the crosshead. Then have the crank turned in the direction the engine is to run until the crosshead reaches one of these marks.

Assume that the exhaust eccentric is on the dead center nearest the cylinder and that the crosshead has reached the line on the guides nearest the cylinder. The exhaust eccentric is now to be turned around on the shaft in the direction the engine is to run until the exhaust valve on the head end just closes the port or until the lines *G* and *J* come together. Fix the exhaust eccentric to the shaft at this point. Then have the crank turned in the direction it is to run until the crosshead reaches the line at the opposite end of the guides, when the exhaust valve at that end of the cylinder should have just closed the port also.

If it does, the compression will then commence when the piston reaches

a point from the end of the stroke corresponding to the distance marked on the frame guides.

The proper amount of compression and lead will have to be finally determined by an indicator after the engine has been started and run under working conditions. This is recommended in every case.

If an engine is to be run condensing, it will require more compression than an engine running noncondensing.

After both sets of valves have been properly adjusted attention should be given the governor.

Loosen the governor springs until the weights can be readily moved from one position to the other by means of the central stem. Now press the stem in until the weights are in their outer position, and block them. Loosen the set screw in the governor connection lever on trip shaft and move the trip lever, *E*, Fig. 77, nearest the governor, which is permanently fastened to the trip shaft, either toward or away from the latch as the case may require, until the crank-end steam valve upon being raised will cut off when the second prick-punched scratch mark on the guide *D*, Fig. 81, appears at the top of guide box. Then tighten the set screw in the governor lever on the trip shaft. That is, with the governor weights in their outer position, the steam valve is only allowed to lift enough to just uncover the lap. The lap is the distance between the first and second scratch marks.

Place the small handle on the front of governor in a vertical position and pull the stem out until it is stopped by the handle, which will bring the governor weights to their inner position. The steam valve now being raised should not be cut off until the third prick-punched scratch mark shows at the top of the guide box, or $\frac{1}{16}$ in. less than the full throw of the short horizontal arm of the steam lever *B*. The movements of the two steam valves may now be equalized by means of the taper pin *L*, in the trip lever of the head-end steam valve. This can be seen in Fig. 77, and acts as a taper key. By loosening the set screw and driving the pin in, the cut-off is shortened; by driving it out, the cut-off is lengthened.

The taper pin is not used with the latest design, the movements of the two valves being equalized by means of the two knurled finger screws on the yoke made fast to the trip shaft at the head-end trip lever, which is itself loose on the trip shaft.

In setting the safety stop, proceed as follows: With the small safety stop handle in a horizontal position and the central stem pulled out as far as it will go, the governor balls are allowed to reach an extreme point beyond their inner governing position, which imparts to the central stem an extra $\frac{7}{32}$-in. motion beyond its working limit. Block the governor in this position. Now screw *J*, Fig. 77, in until the lower end of the pawl *K* strikes the tail of the latch *C*, and the steel on upper end of this latch

is just thrown out of engagement with the lifting block *A*. Make the check nut tight on the screw *J*.

This adjustment being made on both ends of the cylinder, each valve should be raised two or three times to see that proper clearance has been given between the steel on the latch and the lifting block, so that the latch cannot hook on at this point.

Thus, should the governor belt break, or by any other cause the governor balls be allowed to reach their extreme inner position, the steam valves remain seated, cutting off any further supply of steam to the cylinder.

After setting the valves and safety stop, the small handle on governor should be moved to the horizontal position and LEFT THERE until such time as further valve setting is necessary. In that position the safety stop is in operation at all times. Of course, after shutting down this will block the steam valves from lifting and prevent starting up until some change is made in the position of governor balls or other parts. All that is necessary is to loosen the small binding handle on governor link and turn the pin, which is eccentric in the link, half around, in which position the trip levers are given $\frac{1}{8}$ in. advance ahead of the governor. After starting up and nearly reaching speed, turn eccentric pin to original position and lock it.

## VIII

## THE McINTOSH & SEYMOUR ENGINE

The valves of this engine are of the multiported flat gridiron type, located at the four corners of each cylinder in much the same fashion as the Corliss. There are two main steam valves and two main exhaust valves, in addition to which there are two riding cut-off or auxiliary valves placed on top of the main steam valves. The valves are all driven by positive valve gear, consisting of plain links and rockers, operating with a toggle motion, and their movement is crosswise of the cylinder bore.

Figs. 82, 83, 84, and 85 show in outline the arrangement of the valves and gear on a horizontal engine. The main valves, both steam and exhaust, are driven by an oscillating shaft $M$, which derives its motion by a rocker $R$ and link $L$ from a fixed eccentric $F$ on the engine shaft, as shown by Fig. 83. This gives fixed points of opening and closing, and governs the admission of steam and the opening and closing of the exhaust. The connection between the shaft $M$ and the main steam and exhaust valves is shown in the cross section, Fig. 84, and it will be seen that these main valves can be adjusted to vary independently the admission, the release, or the compression. In practice the main steam valve is set to close when about 60 per cent. or more of the stroke has been completed, so that steam may be carried up to this point unless cut off earlier by the auxiliary valve. The governor operates only these auxiliary or cut-off valves. This is done through the medium of the lower rock shaft $A$ and the arrangement of links and bent lever, as shown in Fig. 85. The shaft $A$ is driven from the governor eccentric $G$ by means of the bell crank $B$ and link $l$. The governor eccentric is arranged to revolve *around* the shaft by the action of the governor, as shown in Fig. 82, instead of *across* the shaft, as is more common in shaft governors. It thus governs by varying the angular advance of the eccentric in place of changing the travel of the valve. The arrangement is such that when cut-off takes place the cut-off valve is moving in an opposite direction to the main steam valve, giving a very rapid closing of the port and, consequently, the desired sharp corner on the diagram.

As the valves are multiported, only a very small movement is required

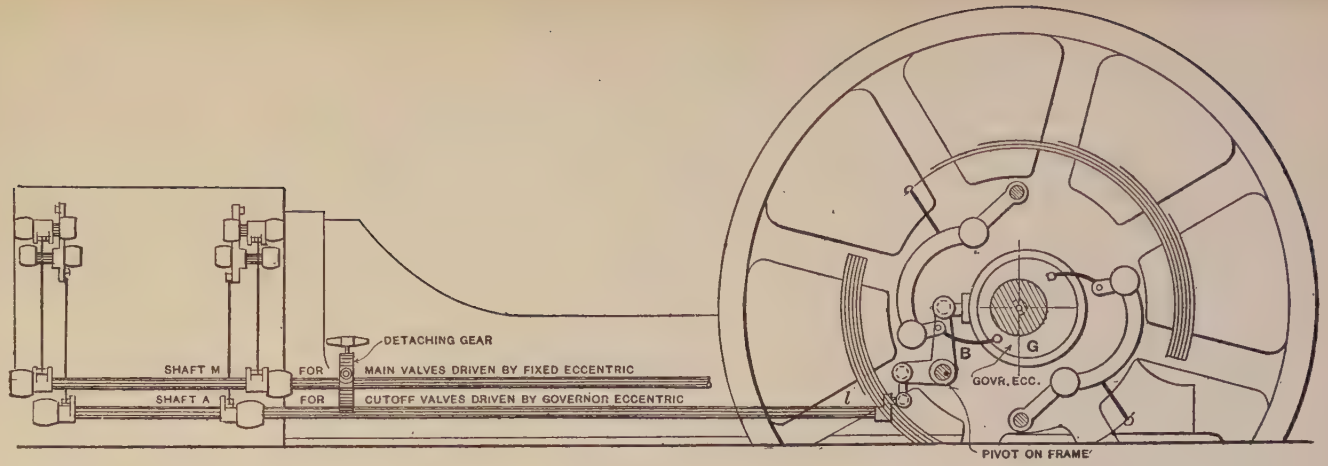


FIG. 82.

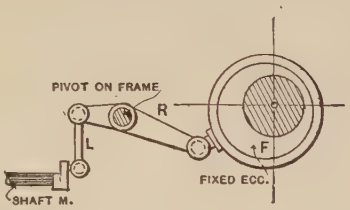


FIG. 83.

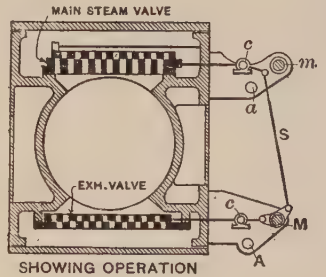


SHOWING OPERATION OF MAIN VALVES.

FIG. 84.

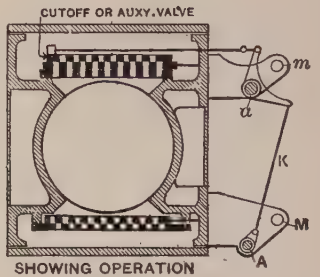


SHOWING OPERATION OF CUTOFF VALVES.

FIG. 85.

to give full port opening. This varies from $\frac{1}{2}$ in. to $1\frac{1}{2}$ ins. from the smallest to the largest size of cylinder.

Figs. 86 and 87 show enlarged views of the cylinder and valve gear,

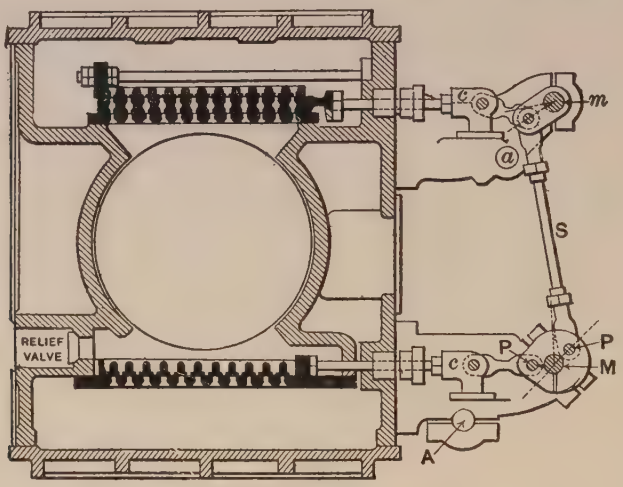


FIG. 86.—DETAILS OF GEAR.

and in connection with Figs. 76 and 77 will allow a ready understanding of the valve motion. (The detailed views are stripped as far as possible of unnecessary details, such as nuts, housings, oil cups, keys, etc.) The

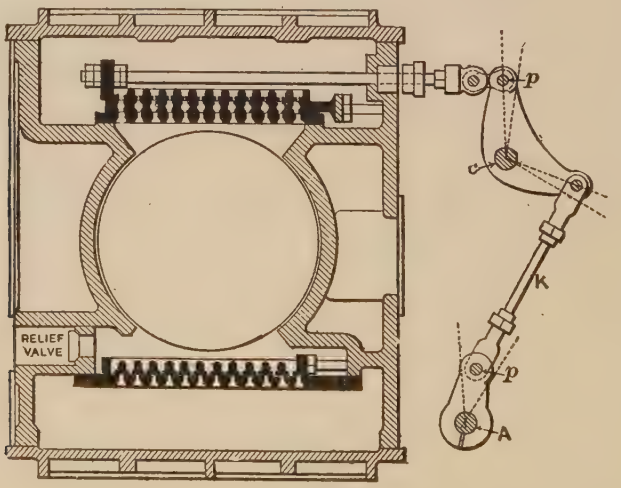


FIG. 87.—DETAILS OF GEAR.

stroke motion derived from an eccentric or any other crank is of course more rapid at the center of the travel than at the ends, and advantage is

taken of this fact to distort the motion received from the eccentric so as to secure a rapid movement at one end of the valve stroke and to retard the motion at the other end of the stroke. This is done by arranging the oscillating movement of shafts *M* and *A* by means of the rockers and links from the eccentrics, so that the pins *P P*, Fig. 86, and *p p*, Fig. 87, will move slightly past the center at the extreme of the stroke, as shown by the dotted lines indicating the angular movement. The result is that at one extreme of the travel pins *P* and *p* are moving through the flat part of the arc and give a large horizontal movement for a small angular motion; while at the other extreme the pins move through a considerable angle without much in-and-out motion. This is conveyed to the valves by the gear in such manner that the valves open and close quickly, but remain practically still when closed.

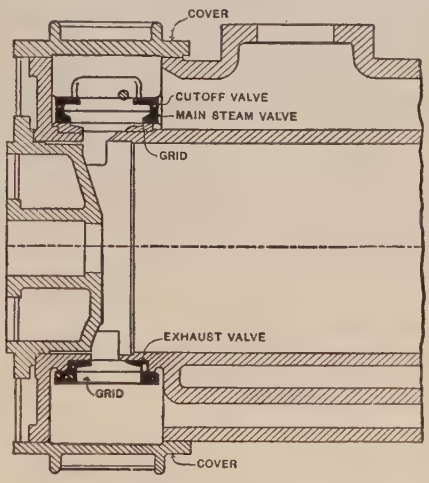


FIG. 88.

The greater part of the valve movement takes place when the valve is open, and at such times the valve is partially balanced or relieved of the steam pressure. Consider, for instance, the cut-off valve. It will be closed by the action of the governor at, say, from 20 to 30 per cent. of the stroke, while the main steam valve, upon which it seats, will remain open much longer. As soon as the edges of the bridges of the cut-off valve project over the ports of the main valve the cylinder pressure will balance it by the amount of the projection, and this balancing will increase as the cut-off bridges cover the main ports. The main steam valve will be similarly balanced between the cylinder and the cut-off valve when it closes, and the exhaust valve moves under very little pressure at any time.

On compound or triple engines the same valve arrangement is used on each cylinder, the main valves being driven by a fixed eccentric, while all the cut-off valves are driven by the governor eccentric, thus equalizing the work on the various cylinders.

The main rock shafts *M* and *A* are carried on brackets from the lower part of the cylinder, and the short upper pins or shafts *m* and *a* are carried by similar brackets at the upper corners of the cylinder.

Adjustment is provided at all wearing points, the links having bronze boxes with key take-up (not shown in Figs. 86 and 87), and the rock shafts having regular babbitted and capped bearings. The valves and the

crossheads *c c*, Fig. 86, are arranged to wipe over and all valve stems are adjustable.

The valve seats or grids are separate from the cylinder and are put in place with scraped joints, avoiding the use of soft packing. Valve covers are provided over each of the four sets of valves, as in Fig. 88.

As shown in Figs. 86, 87, and 88, the ports and clearance spaces are very small, the total clearance in most cases being less than in the Corliss type. In a word, the distinctive features of this valve gear are: Grid-iron valves at four points; the main valves driven by a fixed eccentric and controlling admission, release, and compression; and the cut-off valves driven by a governor eccentric, controlling cut-off by varying the angular

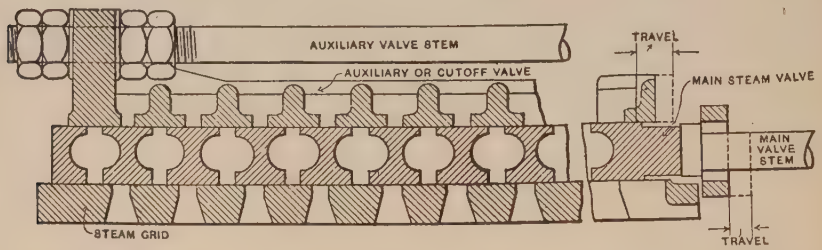


FIG. 89. — MAIN STEAM VALVE IN EXTREME INNER POSITION. AUXILIARY STEAM VALVE IN CENTRAL POSITION.

advance; all driven by a positive valve gear which permits of high rotative speeds and dispenses with dashpots and releasing gear.

Figs. 89 and 90 are enlarged views of the valves and grids, and show the shape of valves and ports, the laps and the attachment of valve stems;

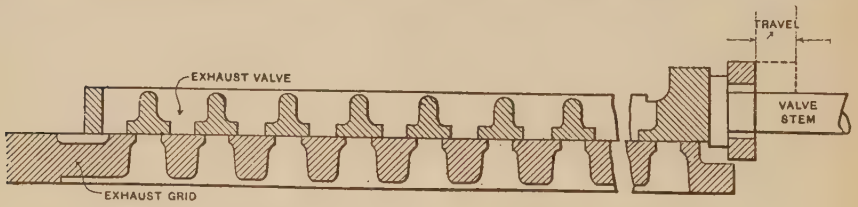


FIG. 90. — EXHAUST VALVE IN EXTREME INNER POSITION.

while Figs. 91, 92, and 93, in connection with Figs. 82, 83, 84, and 85, illustrate the instructions for setting the valves.

## Setting the Valves

As a preliminary to setting the valves it is necessary to know the strokes, laps, and leads of all valves, the points of cut-off for both main and auxiliary valves and the point of exhaust closure or compression.

These vary with the individual engine and must be obtained from the maker in each case. The strokes, laps, and leads will be given in inches, and the points of cut-off and compression will be given either in fractions of the stroke or in inches of the stroke measured from the dead-center point. Having these figures, the first operation is to set the main valves, both exhaust and steam. First turn the engine over slowly and by means of link *L*, connecting the rocker *R* and shaft *M*, Fig. 83, adjust the angular movement of shaft *M* until the exhaust valve shows exactly the proper stroke or travel. A mark will be found completely encircling the valve stems at some point outside the stuffing box, as at *X*, Fig. 91; and the stroke can be measured by means of this mark, either from the face of the box or from any other fixed point. As soon as the stroke is fixed, set up the lock nuts on link *L* to prevent change, and by means of link *S*, Fig. 84 or 86, adjust the stroke of the main steam valves. The stroke of the exhaust valve is adjusted first because it is directly connected to shaft *M* by links of fixed length, and the correct movement of shaft *M* is obtained without introducing link *S*.

So far no attention has been paid to laps or leads, the strokes only being adjusted. Next, remove the valve covers and screw the valve stems in or out of the small crossheads *c c*, Figs. 84 and 86, until the valves show the proper lap.

Then place the engine on the head-end dead center, and roll the fixed eccentric *F*, Fig. 83, around the shaft until the head-end main steam valve shows the proper lead or is "line and line," if there is no lead. Then lock the eccentric in place by the set screws.

Before going any further it is well to make a mark on crosshead and guides, showing the head-end dead center, as in Fig. 92; its use will be explained later. When this is done, roll the engine over to the crank-end dead center, and if the work has been accurately done the crank-end main steam valve will show the proper lead. Make another mark on the guides opposite the mark on the crosshead; the distance between this mark and the one formerly made will be the stroke in inches, as shown by Fig. 92.

Now measure forward on the guides, from the head-end dead center, a distance in inches equal to the point of cut-off of main steam valve and make a mark *R*. (This distance is given in inches by the engine builder.) Place the engine on the forward stroke until the mark on the crosshead coincides with line *R*, as in Fig. 92, the head-end steam valve should come line and line with the port.

Measure forward again from the head-end dead center to the point of compression or closure of the exhaust valve, and make another mark *O* on the guides. When the engine is placed on the forward stroke so that the crosshead mark coincides with mark *O*, the crank-end exhaust valve

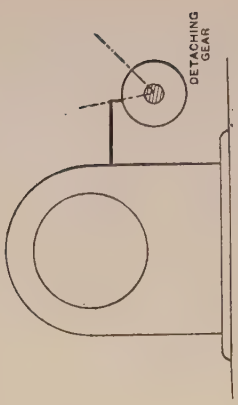


FIG. 93.

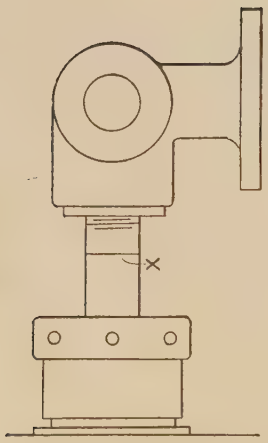


FIG. 91.

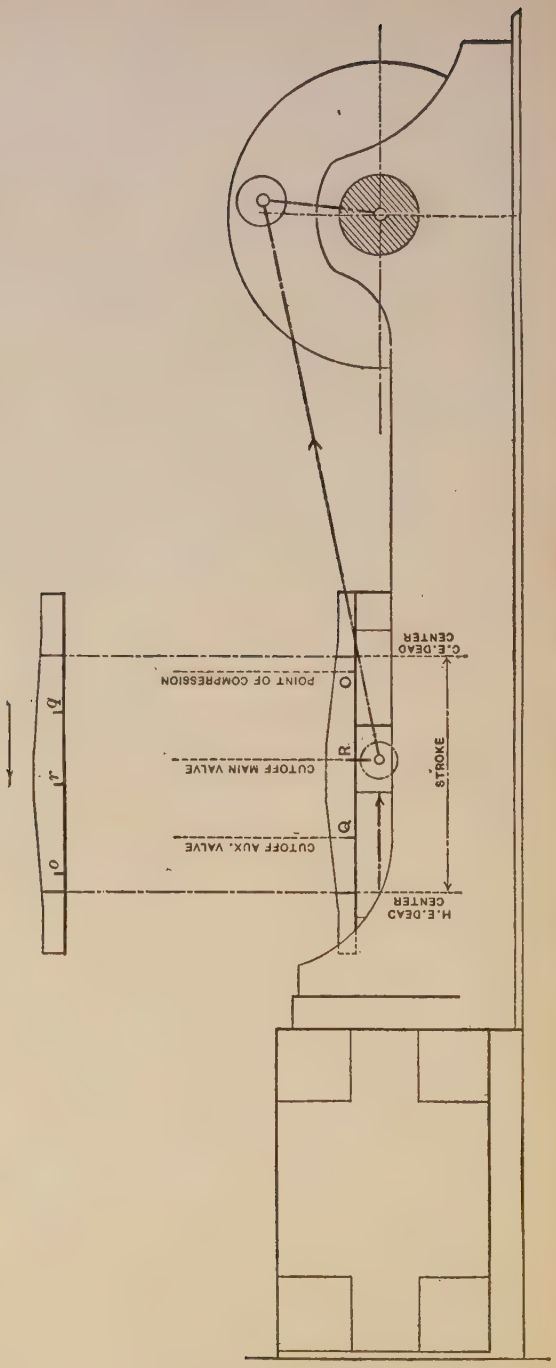


FIG. 92.

should come line and line. Make similar marks *r* and *o* on the guides, measuring back from the crank-end dead center, for the points of main valve cut-off and compression on the return stroke, as shown above Fig. 92, and by placing the engine on the return stroke, check to see that the other valves come line and line. On all main steam- and exhaust-valve stems will be found an encircling mark like that at *X*, Fig. 91. This trams, by a tram of known length, with a mark on the cylinder casing when the valves are line and line, thus making it unnecessary to remove the valve covers.

The auxiliary or cut-off valves yet remain to be set. Measure forward on the guides and locate point *Q*, the point of cut-off of the auxiliary valve as furnished by the builders; also measure back from the crank-end center and locate the similar point *q* for the return stroke. Adjust link *l*, Fig. 82, and link *K*, Fig. 85, to give the proper stroke of the valve, measuring the stroke as before by the mark *x* on the stem. Then turn the engine forward until the crosshead mark coincides with mark *Q* and set the head-end auxiliary valve line and line with the port of the main valve. Put the engine on the return stroke to point *q* and set the crank-end auxiliary valve line and line with the main valve, the governor remain-maining closed during both operations.

This completes the valve setting. To facilitate future settings, two punch marks can be made in the rim of the detaching gear of shaft *M* to agree with a tram from the cylinder face, as in Fig. 93, thus establishing at a convenient point the proper angular motion for the stroke of the main valves. It is of course necessary to have all shaft bearings, links, rockers, etc., in good, snug working order and free from unnecessary lost motion. In placing the engine on the dead centers and in turning it over to the several points of the stroke, it is equally necessary to take up all "play" or lost motion in the direction of rotation, as would occur if the engine were actually turning over under pressure.

# IX

## THE BUCKEYE ENGINE

THE Standard Buckeye engine is of the two-valve type, having a balanced box main valve working over a port at each end of the cylinder,

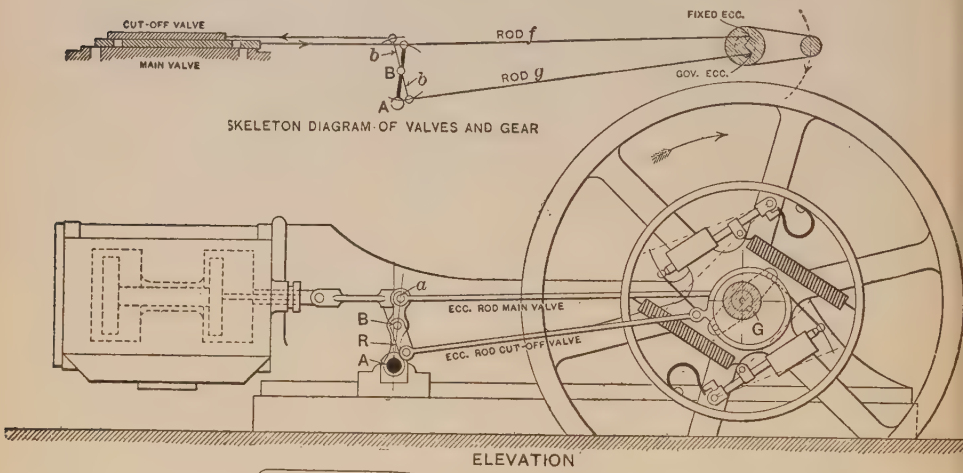


FIG. 94.

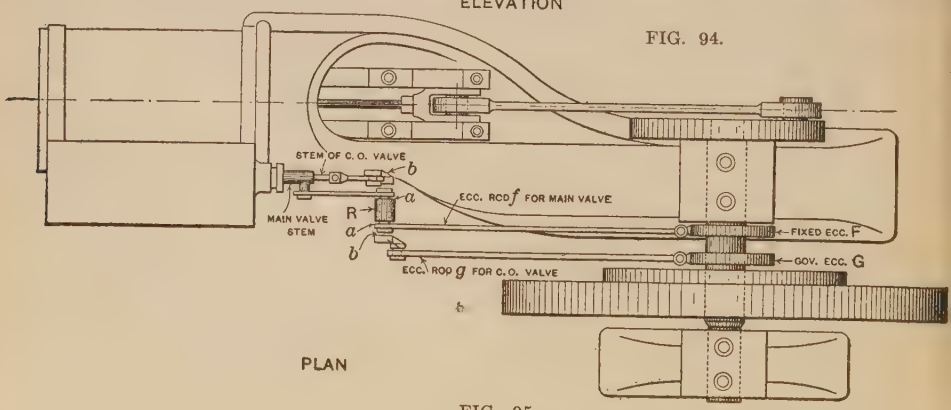


FIG. 95.

and a flat cut-off or auxiliary valve riding inside of the main valve. The single short port at each end of the cylinder serves alternately for the purposes of admission and exhaust.

Both valves are driven by positive valve gear. The main valve receives its motion from a fixed eccentric and governs the admission and the release or compression. The cut-off valve is controlled from the governor eccentric and governs the cut-off only.

The elevation and plan of Figs. 94 and 95, and the sections of Figs. 96, 97, 98, and 99, show the arrangement and operation of the valves

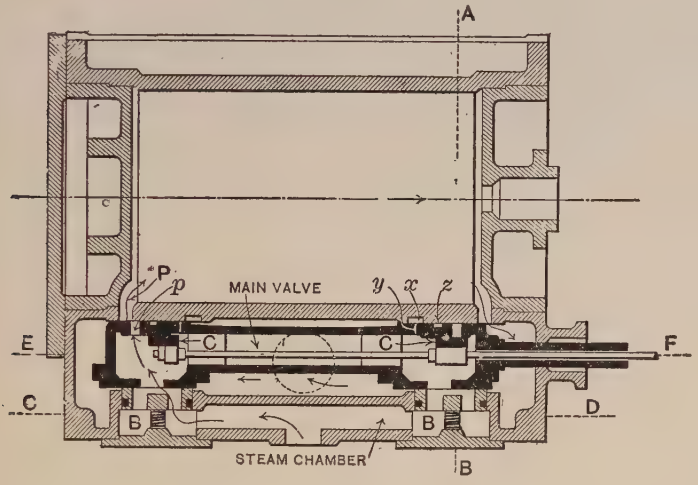


FIG. 96. — HORIZONTAL SECTION.

and valve gear. As shown by Figs. 96 and 98, the valve chest is divided by partitions into two separate and distinct parts, a steam chamber and an exhaust chamber. The main valve is a flat hollow box of the horizontal and vertical sections shown in Figs. 96 and 99, set upright in the exhaust

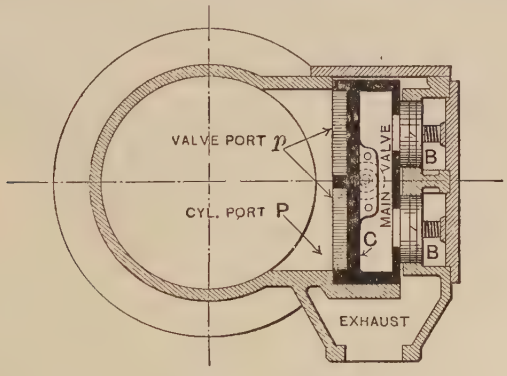


FIG. 97. — VERTICAL SECTION A–B.

chamber and working lengthwise of the cylinder. It takes steam into the interior through the four balance pistons *B*, which connect it with the

steam chamber and serve to hold it in place; and steam is admitted to the cylinder through ports *p*, which coincide at proper intervals with the cylinder ports *P*. The exhaust passes out over the ends of the valve directly into the exhaust chamber which surrounds the valve.

In Fig. 96 the engine is on the head-end center and the course of the steam and exhaust is shown by the arrows. The main valve is hollow

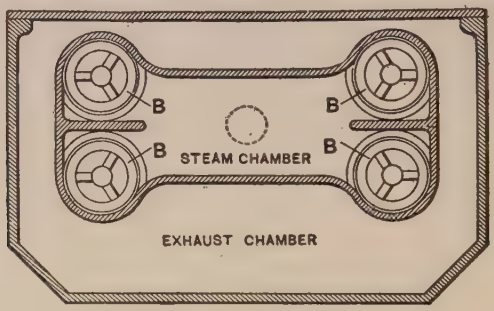


FIG. 98. — VERTICAL SECTION C–D.

and supplies its steam from the inside; its motion is just opposite to the piston movement, and its eccentric follows the crank instead of leading it, as shown in the skeleton diagram of Fig. 94. The balance pistons *B* are packed in their bores by spring rings, and have a scraped joint on the back of the valve; this makes a steam-tight passage from steam inlet to cylinder, irrespective of the remainder of the valve chest.

On the side of the engine is a rocker arm, *R*, Figs. 94 and 95, pivoted to the frame at its lower end *A* and carrying at its upper extremity the

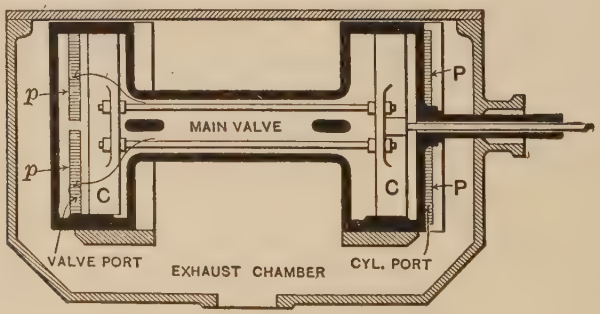


FIG. 99. — VERTICAL SECTION E–F.

pin or shaft *a*. One end of this pin receives the rod from the fixed eccentric *F*, and the other end transmits the motion to the main valve, as shown in Fig. 95. The main valve has thus a fixed travel and governs the admission and release just as in an ordinary slide valve throttling engine.

It is arranged to close the cylinder port at some predetermined point, say two thirds of the stroke, corresponding to the maximum horse power the engine is expected to develop.

The cut-off valve consists of two narrow flat plates *C C*, Figs. 96, 97, and 98, connected by rods and riding over seats formed on the back of the main valve. It is controlled from the governor eccentric through the medium of the two arms or rockers *b b*, pivoted on the main rocker arm *R* at point *B*, about midway of its length. (This is shown in detail in Fig. 100.)

The skeleton diagram of Fig. 94 shows the engine on the crank-end center, with the governor eccentric in position for about one quarter cut-off. The motion of the cut-off valve is seen to be compounded of the

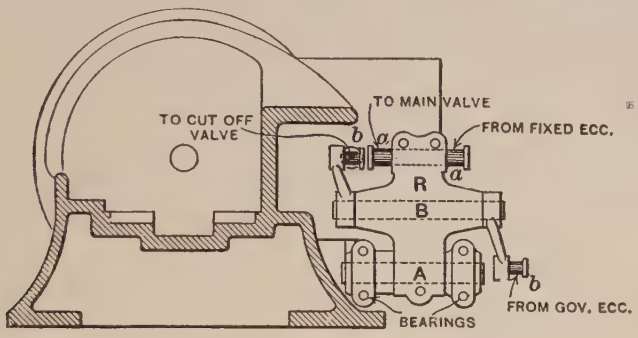


FIG. 100. — SECTION SHOWING ROCKER ARM.

motions of both fixed and governor eccentrics. Owing to the fact that its rocker is pivoted on the main rocker, it rides back and forth *with* the main valve; and it plainly has also a travel *on* the main valve, derived from its own or governor eccentric. The governor, as shown by Fig. 94, operates by varying the angular advance or by revolving eccentric *G* around the shaft instead of across it; so that the cut-off valve has a constant length of travel on the main valve, no matter what their relative positions or the point of cut-off. The main valve has also a constant travel, as it is driven by a fixed eccentric. This prevents the wearing of shoulders and is therefore conducive to tightness.

The extreme positions of the governor eccentric are 45 degrees or more each side of the position of Fig. 94, and the cut-off may thus take place at any point from the beginning of the stroke up to the maximum cut-off allowed by the main valve, according to the position of the governor and the corresponding angular advance of eccentric. The arrangement is such that cut-off takes place near the middle of the cut-off valve travel, where the motion is fastest, thus giving a quick closure of the port. The stem of the main valve is made hollow to admit the cut-off stem, permitting

attachment to each valve to be made at its center of gravity. The area of the balance pistons is sufficient to hold the valve to its seat against the cylinder pressure, which is greatest during admission.

This cylinder pressure becomes less and less during expansion, while the pressure due to the balance pistons remains constant, so that the valve is balanced during only a part of its stroke. To counteract the excess pressure of the balance pistons during expansion, recesses or relief chambers, Fig. 96, are cut in the valve seats and filled with live steam from the interior of the valve through holes $y$, thus allowing the steam pressure to get behind the valve and balance it. Channels $z$, cut clear across the valve face, prevent the steam from acting on too great an area and thus overbalancing the pistons; and at the instant of admission the valve uncovers recess $x$, as shown at the left hand of Fig. 96, leaving the valve

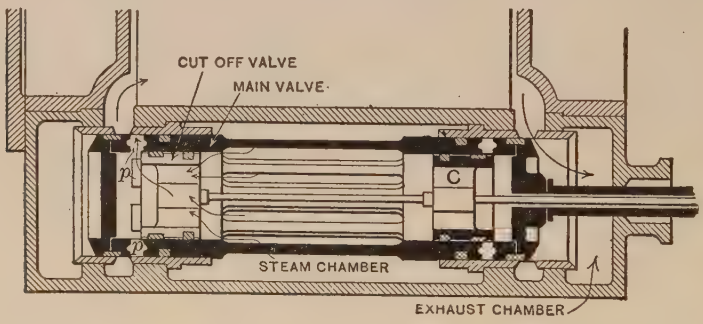


FIG. 101. — PISTON VALVE.

to be balanced by the cylinder pressure during admission. Small coil springs behind the balance pistons hold the valve in place while steam is shut off the engine. It is not attempted to balance the valve entirely; enough excess pressure is allowed to hold the valve firmly to its seat.

Owing to the positive valve gear, or the absence of releasing mechanism, it is possible to operate at any desired rotary speed. The engines are made in three types with long, medium, and short strokes, having rotary speeds of 60 to 170, 100 to 230, and 200 to 325 revolutions per minute, respectively.

For tandem-compound and cross-compound engines the governor cut-off is usually applied to both cylinders, the valve stems of both main and cut-off valves being extended through from one valve chest to the other.

For very high initial pressures and for the high-pressure cylinders of compound engines, the balanced piston valve of Fig. 101 is frequently used. It has the same general features as the balanced flat valve of Fig. 96. The main valve consists of two hollow cylinders connected by a series of bars, and having the outer ends closed. It takes steam into the interior

through the spaces between the rods and admits it into the cylinder through ports $p$, as shown. The exhaust passes out over the ends of the valve. The cut-off valve $C$ consists of two short, hollow pistons or cylinders, rigidly connected, and working over ports $p$, on the inside of the main valve. Both main and cut-off valves are made tight by spring rings. The valve gear is identical with that previously described.

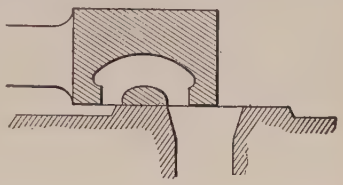

FIG. 102.

To secure quick admission and release with a small valve travel, multiported valves are sometimes used. This is usually done only on long-stroke engines of large size, simple valves with sufficient travel being preferred on small high-speed engines. Fig. 102 shows a double-ported main valve.

## Setting the Valves

The operation of setting the valves is quite simple. First see that pin $a$ at the upper end of rocker $R$ vibrates an equal distance each side of its central position. This may be done by plumbing up from pivot $A$, Fig. 103, and measuring the distances $aB$ and $aC$, which represent the horizontal travel of the pin. If these are not equal, adjust the fixed eccentric rod $f$ until they are equal. For future reference, marks indicating the corresponding positions may be made on the hub or other convenient point, as shown, if they are not already there.

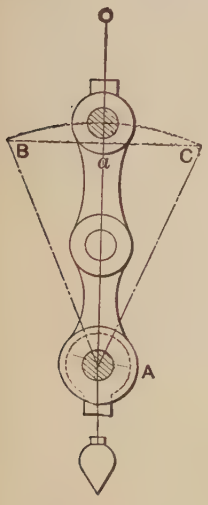


FIG. 103.

Next place the engine on the head-end center, being careful to take up all lost motion in the direction of rotation.

Unhook the fixed eccentric $f$ and place the rocker arm $R$ in its central position. The main valve should then be in its central position on the valve seat. Now roll fixed eccentric around the shaft, to such a position *behind* the crank that the next valve movement will be away from the crank, or contrary to the forward stroke of the piston, as shown in Fig. 104; and couple the eccentric rod $f$ to pin $a$ of the rocker. Then leaving the engine on the dead center, roll eccentric $F$ further around the shaft toward the crank until the outer edge of valve port $p$ overlaps the inner edge of cylinder port $P$ by the amount of the lead, or until the port edges are line and line, if there is no lead. The valve ports, crank, and eccentric will now occupy a position about as Fig.

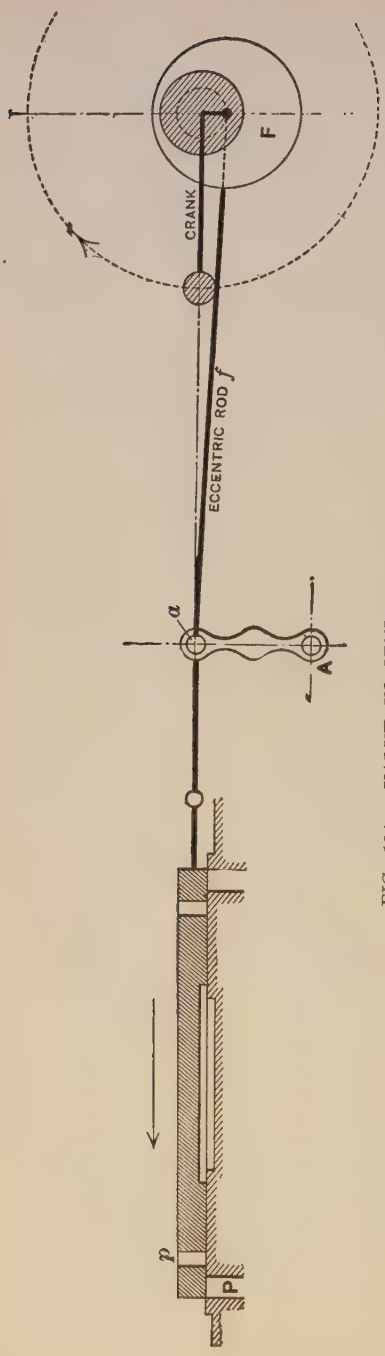


FIG. 104. — VALVE IN CENTRAL POSITION.

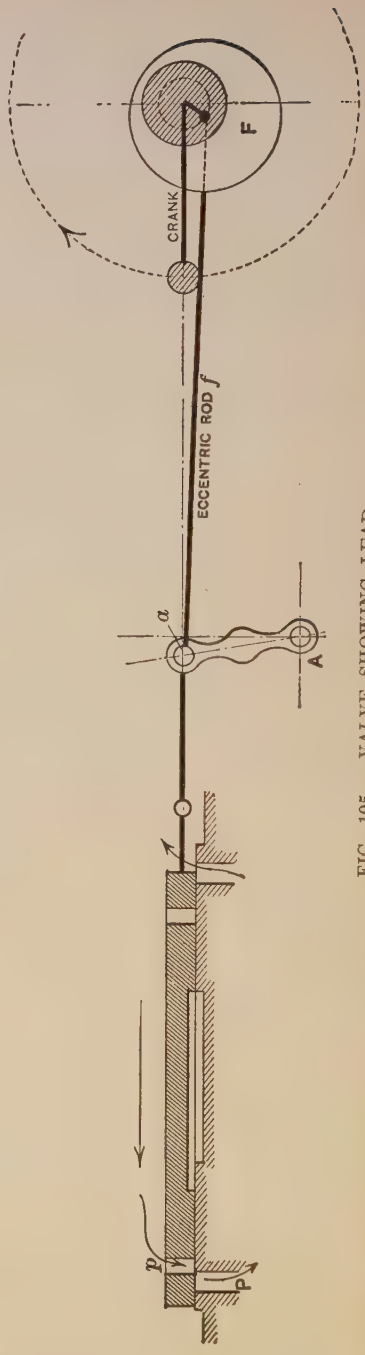


FIG. 105. — VALVE SHOWING LEAD.

105. Lock the eccentric $F$ in place and roll the engine around to the crank center; if the work has been accurately done, the valve will show proper lead on the crank end. Slight adjustments may be made by the valve stem. This completes the setting of the main valve.

If the eccentric is but slightly out of place, it will be necessary only to adjust the eccentric to show proper lead. For the cut-off valve, first see that it makes the proper length of stroke on the main valve, adjusting eccentric rod $g$ until it does. Then with the engine on the crank-end center, allow the governor to come to rest on its inner stops. This will revolve eccentric $G$ backward on the shaft until its center about coincides with the crank. This is shown by Fig. 94, where the governor is in an intermediate position, the dotted lines representing the extreme inner and outer positions of the governor arms. The exact position of eccentric $G$ when the governor is at rest will be fixed by the design of the engine; for condensing engines it may be a little ahead of the crank, while for heavily loaded engines not subject to great fluctuations of load, it may be a little behind the crank.

Under ordinary conditions the crank and the governor eccentric should pass the dead center at the same time, in the same direction.

Then with the engine on the crank-end center and the eccentric $G$ coinciding with the crank, the cut-off valve should be in its extreme left-hand or head-end position, since the rockers $b$ reverse the motion of the eccentric. If the valve does not occupy this position, adjust the valve stem until it does. With crank and eccentric still coincident, turn the engine over to the head-end center and see that the cut-off valve is in its extreme crank-end position. The point of cut-off is then determined by the angular advance of the eccentric, which in turn depends upon the adjustment of the governor. Roughly speaking, for one quarter cut-off the governor should occupy such a position as to bring eccentric $G$ about 90 degrees ahead of the fixed eccentric.

## IX—(*Continued*)

## THE BUCKEYE ENGINE—*Continued*

### The Buckeye Piston Valve

The first part of this chapter treats of the older Buckeye engine with box type of valve. In this part of the chapter we wish to give the builders instructions for setting the valves on their newest type of piston valve with inside cut-off.

Fig. 105A gives a sectional view of the cylinder and valves of this engine with the latter in position. It will be seen that the valve setting

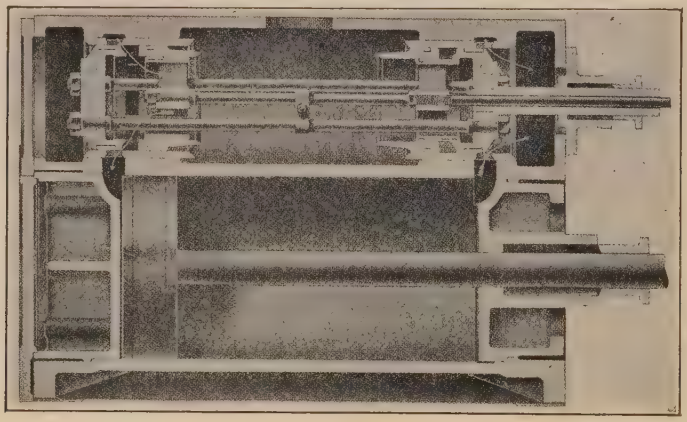

FIG. 105A.

involves the same principles as explained for the box type of Buckeye valve, but as there are several points of difference in the details, the following instructions will be of value and necessity to the operating engineer:

### Setting Piston Valves

The foregoing instructions for setting side valves are to a certain extent inapplicable to piston valves, as none of the events can be observed by removing plates or covers, except where a guide stem works in a removable bonnet, as at the right of the cut, *A*. When this bonnet is removed the exhaust and exhaust closure *CH* can be observed. These

conditions necessitated the system of marks which will be found on the valve stems with letters adjacent thereto, the meaning of which letters is as follows:

On Main Valve Stems:

*T T*, ends of travel.
*LH*, lead, head end.
*CB*, compression, bed end.
*C*, center of travel.
*CH*, compression, head end.
*LB*, lead, bed end.

On Cut-Off Valve Stems:

*CB*, cut-off, bed end.
*C*, center of travel.
*CH*, cut-off, head end.

### To Use the Marks

Provide a parallel straight-edge of thin wood or metal, of suitable length, and exactly 2 ins. wide. Remove the packing from the stuffing boxes *L*, *M*, *N*, and shove the glands home against their collars and bind them there with followers. Then place the straight-edge against the projecting end of the gland and when its outer edge cuts any of the marks (except *T T*) the event indicated by it should be just taking place.

Marks *T T* do not indicate events, but extremes of travel, and before testing by any of the others these must be cut by the straight-edge at ends of travel. If such is found not to be the case, the adjustment required to correct will be found as follows:

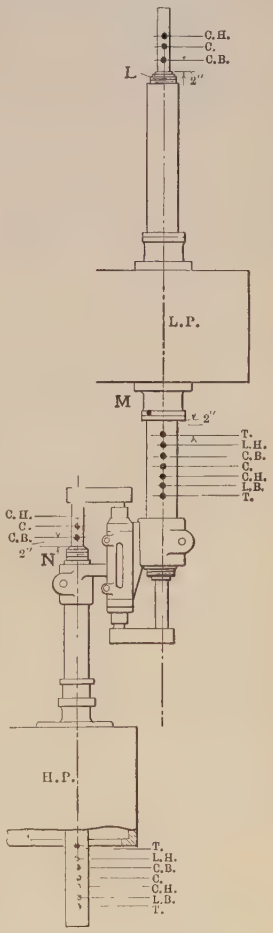


FIG. 105B.

Setting the Main Valve and Eccentric.—First, test and correct the lengths of the valve connections—the eccentric rod and short connection between the rocker arm and valve stem. If the eccentric has been set to marks, this is done by equalizing the leads and compressions, particularly the compressions, but to make our instructions cover all possible cases we will suppose that the eccentric is out of position by an indefinite and unknown amount. In that case, the only test of the proper length of the rods is *equality of maximum admission openings*, which once equalized will remain so in all positions of eccentric. For this test the shaft is revolved to each extreme of the eccentric's travel in turn, the admission opening

showing in each case (by marks on the valve, remember) measured and compared and if found unequal, the length of the connections changed by an amount equal to one half the difference between the two openings, *lengthening or shortening as required so as to throw the valve toward the end at which the smallest opening was shown.* For instance, suppose the smallest opening was shown at the "crank end," the connections should be *shortened,* and *vice versa.*

But instead of testing by *equality of maximum admission openings* as here stated, test by the marks.

When the above adjustment is correctly made all subsequent ones must be made by turning the eccentric on the shaft, the length of the valve connections being then correct under all circumstances.

To SET ECCENTRIC in correct angular position, place crank on one of its dead centers and turn the eccentric, if need be, till the mark *LH* or *LB* is cut by the straight-edge, according as the piston may be at the "head" or "bed" end of cylinder. This completes the set of the main valve, unless subsequent indicator tests should show the desirability of slight changes of adjustment. Thus if compression shows inequality, it is desirable to equalize them, though in doing so the equalization of marks *T T* has to be slightly departed from. They are only as correct as they can be made without indicator tests. Equality of compressions is the end to be attained, though that is more a matter of looks on the diagram than of practical running qualities, as equalizing by the marks will equalize compressions accurately enough for all practical purposes.

WHEN THE MARKS ON THE GUIDE STEM (as at the right end of the cut) are to be consulted, the bonnet and its gasket are removed and the straight-edge placed against the face of the chest when its *inner edge* must cut the mark to be consulted.

Cut-off adjustments may be made as per Part I of this chapter, but if there is no steam pressure available for the method, the cutting of mark *CH* or *CB* by the outer edge of straight-edge will give the same indication. Then proceed to *time* the cut-off in piston stroke, bearing in mind, however, that when a condenser is in use the governor wheel may have to be advanced to properly control the speed when running as lightly loaded as it is ever likely to be.

The center of travel mark *C* on cut-off stem is of use only to bring about the conditions described, Part I, but in a different and simpler way, thus: when the mark is cut by the straight-edge as directed the wrist pins to which the main and cut-off valves are attached should be about in line with each other.

# X

## THE PORTER–ALLEN ENGINE

This engine is of the four-valve type, and the special feature of the gear is the use of a link, actuated by a single eccentric and driving independently the steam and exhaust valves.

There are two steam valves governing the admission and cut-off, and two exhaust valves governing release and compression. The two steam valves are placed vertically in a chest at one side of the cylinder, and the two exhaust valves are similarly placed in a second chest on the other side of the cylinder, as shown in the plan of Fig. 107. All the valves are driven by positive gear, and their movement is lengthwise of the cylinder.

Figs. 108 and 109 are respectively horizontal and vertical sections of the cylinder and valve chests, and show the details of the valves. The valves are all balanced flat-side valves, working between the valve seat on one side and a pressure plate on the other. The movement of each valve covers or uncovers four openings for steam, two on the cylinder face and two on the outer face, as shown by the arrows in Fig. 108; so that only narrow seats and short valve strokes are required to give large edge opening. The opening movement of each valve is inward or toward the center of the cylinder.

The arrangement of the valve gear is shown by the elevation and plan of Figs. 106 and 107, and the link detail of Fig. 110. The eccentric $E$ is forged on the shaft and is coincident with the crank. The eccentric strap and the curved link $L$ are made in one piece, as shown, and the link is pivoted at its central point on the trunnions $t$, which in turn are pivoted to the frame at the fixed point $A$. The vibration or horizontal movement of the trunnions is equal to the throw of the eccentric. In the slot of the link is the block $B$, from which are driven the two steam valves. The short rock shaft $s$ on the frame is actuated by the outer arm $a$, which is connected by the steam rod with the block in the link. It carries on its inner end the two arms $H$ and $C$ which drive respectively the head-end and crank-end steam valves, through the medium of the two coupling rods $h$ and $c$, and the two valve stems. The steam valves are offset in the chest, as shown by Fig. 106, in order that connection to each

valve may be made at its center of gravity; and short guides are provided at the connections of the levers $H$ and $C$ and the valve stems.

An inspection of Fig. 110 will show that the link has a peculiar movement, composed of the horizontal and vertical throws of the eccentric.

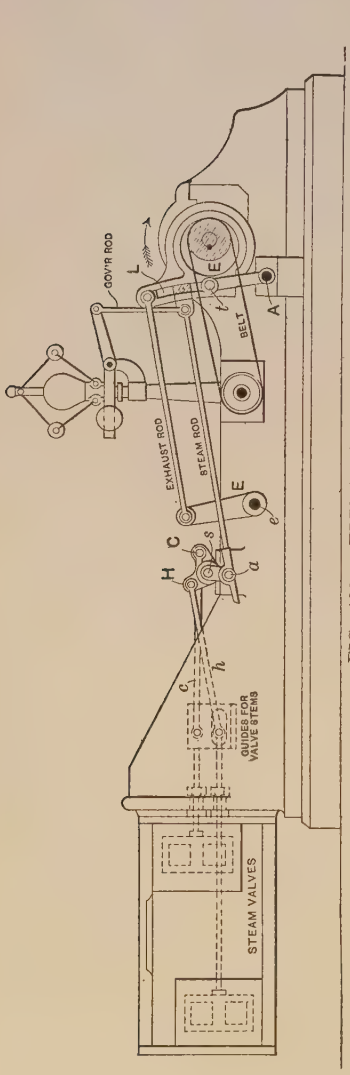


FIG. 106. — ELEVATION.

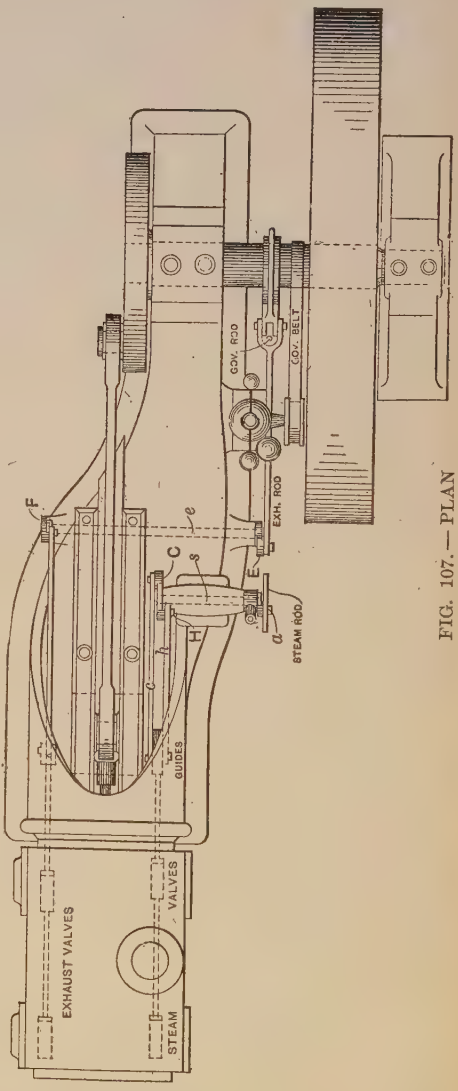


FIG. 107. — PLAN

The link is restrained from rising by the trunnions, and the horizontal throw of the eccentric draws off the lap of the valve, while the vertical throw tips the top of the link alternately to and from the cylinder, as the eccentric center rises or falls in its revolution, the upward throw tip-

ping the link toward the cylinder and the downward throw tipping it from the cylinder or toward the shaft. This tipping of the link opens and closes the steam valves by rocking the rock shafts by means of the steam rod and arm *a*.

This movement is shown by Figs. 106, 107, 111, and 112, the last two being in diagram and exaggerated for clearness. In Figs. 106, 107, and 111 the engine is on the head-end center; the head-end steam valve is open for lead, and the crank-end valve is closed, the eccentric, the link, and the arms *a*, *H*, and *C* being about in the positions shown. In Fig. 112 the engine has made part of its stroke and the eccentric has reached the position shown. The upward movement of the eccentric has tipped the link toward the cylinder and the block is back of its former position,

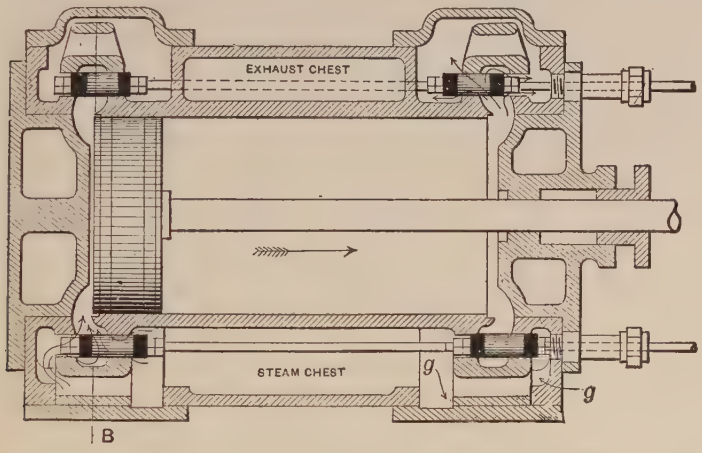


FIG. 108. — HORIZONTAL SECTION OF CYLINDER.

as shown by the dotted line dropped from Fig. 111. This has pushed arm *a* to the left, and has pulled the head-end valve to the right and wide open by means of arm *H*, rod *h*, and the lower connection. As the arm H is nearly in its upper or midposition, the slight angular movement of the rock shaft *s* results in a comparatively large horizontal movement and the valve is opened quickly. At the same time the arm *C* moved downward through the same arc as arms *a* and *H*, pulling the crank-end valve to the right; but, as arm *C* is about at the end of its travel, the angular movement results in only a very small horizontal movement, hardly moving the crank-end valve on its seat. Thus the valves are opened and closed quickly by the middle movement of their arms, and have very little movement while open or closed, as the arms are then at the extremes of the travel. As shown by Fig. 106, the position of the block in the link is under the control of the governor, a dropping of speed causing the governor balls to drop and so raise the block, and an

increase of speed forcing the block down toward the trunnions. When the block is at the top of the link, as in Fig. 110, the steam rod receives the full tipping motion of the link and cut-off takes place at the maximum point, about six tenths of the stroke. On the other hand, when the governor balls are in the extreme upper position the block is forced clear down to the trunnions, and so receives none of the tipping motion of the link. Then the valve is merely opened for lead, and is closed immediately.

Thus the steam valves are always opened and closed quickly at the midtravel of their arms; the velocity of cut-off increases as the cut-off is lengthened, since the block is higher in the link, and so corresponds to the increased piston velocity near midstroke; and the velocity of valve movement is increased directly with the speed of the engine.

The well-known Porter fly-ball governor is used. It is carried on a bracket from the engine frame and is belted to the crank shaft. Its dis-

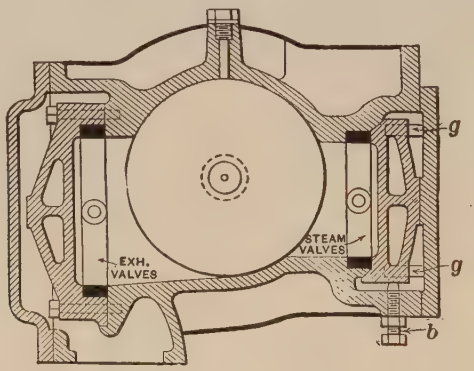


FIG. 109. — SECTION AT A–B, LOOKING TOWARD CRANK.

tinguishing features are light fly-balls with a high rotative speed, to secure sensitiveness, and a heavy ball or weight on the vertical shaft to secure the gravity effect required to keep the revolving balls in their effective plane. Its sole function is to raise or lower block $B$ in the link. Since the valves are light, perfectly balanced, have a central draft or attachment, and small movement, very little force is required to move them and the load on the governor is small.

The exhaust valves are placed in a separate chest on the crank side of the cylinder, opposite the steam valves. They have a fixed travel and are driven from a stationary point on the link by means of the exhaust rod, the rock shaft $e$, which passes through the engine frame, and the two arms $E$ and $F$ on the opposite ends of shaft $e$, as shown in Figs. 106 and 107. They are so arranged that the opening movement of one valve and the closing movement of the other takes place at the middle of the vibration of the arms where the motion is swiftest.

One half of the exhaust valve movement is sufficient to give full port area for release, and this is accomplished by the time the piston has completed its forward stroke; so that the return stroke is begun with a wide open release port in front of the piston. Closing does not begin until the piston has accomplished more than half stroke, where its speed is diminishing, so that there is no throttling of the exhaust until just after port closure.

The details of the cylinder valves and pressure plates are shown in Figs. 108 and 109, the latter being a section through the head-end valves,

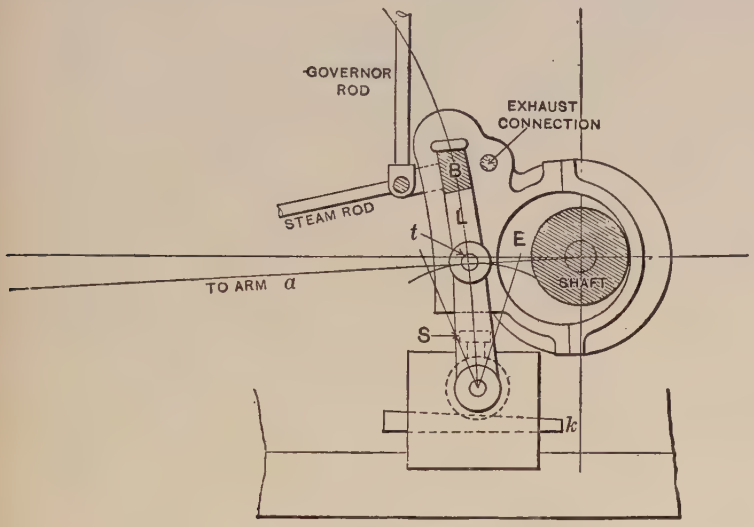


FIG. 110. — DETAIL OF LINK.

and showing the steam valve on this end lower than on the other, as is also shown in dotted lines on Fig. 106. The valves consist simply of flat rectangular frames with a central bar for the attachment of the valve stem.

The pressure plates of the steam valves are held between the side guides *g g*, Figs. 108 and 109; and in the other direction between a planed spot on the cover and the valve seat. Steep beveled seats are on the valve seats as shown, and the pressure plate is held in position by the adjusting screws or bolts *b*, Fig. 109.

The plates are adjusted by these bolts; screwing the bolts in forces the plate up and away from the valve; backing the bolts out lowers the plate and the steam pressure holds it against the valve. They are properly adjusted when, with steam on and all parts at the working temperature, the valves may be moved easily by the starting bar without leaking at the joints or seats. These plates are made hollow, as shown, to admit steam to

the outer edges of the valves. The adjusting bolt has a hardened steel end which works on a hard-steel nut or socket in the pressure plate. The exhaust valves are also flat rectangular frames and are set lower than the bottom of the cylinder, in order to secure perfect drainage.

The pressure plates for these exhaust valves are shown at the left in Fig. 109. They are not adjustable, as are those for the steam valves, but are bolted to the face of the valve seat. They are also made hollow to furnish ample exhaust passage.

All four plates are made very stiff and rigid to prevent them from springing and leaking when subjected to the pressure.

A removable cover over each valve affords ready access to valve, pressure plate, and seat.

In short, the distinguishing features of this valve gear are flat-balanced valves at four points of the cylinder, the steam valves at one side and the exhaust valves at the other; all valves independently adjustable; a single eccentric with link motion and positive gear for all valves, with a fly-ball governor controlling the cut-off; an arrangement of gear whereby the valve motion is made to agree in velocity with that of the piston, and an ability to run at any speed, due to the use of positive gear.

## Setting the Valves

The joint of the valve gear consists of hardened steel pins and hardened steel bushings in the rod ends; there is therefore no adjustment in the length of the rods and the valve strokes are determined and fixed when the engine is built, requiring no adjustment.

To set the steam valves, first place the engine on the head-end center in the usual manner, taking up all lost motion in the direction of rotation. Block the governor up until the block *B* comes down to the center of the trunnions. Then remove the valve covers and set the head-end valve, by means of the valve stem, until it shows the proper lead—$\frac{1}{16}$ in. or more—at that end, as given by the engine builder. Then turn the engine to the other center and set the crank-end valve to show the same lead. Now let the governor down, bringing the block to the top of the link. This will move the valve a short distance toward the crank, no matter which center the engine is on. This increases the lead at the head end and decreases it at the crank end, so that the lead at the two ends is varied according to the position of the block or the distance to which steam is carried. By varying the lead, the points of cut-off are equalized, and the correctness of the valve setting may be tested by blocking the governor in any position whatever, and turning the engine over throughout a complete revolution. The points of cut-off or the distance the piston has traveled when cut-off takes place will be the same for both forward and return

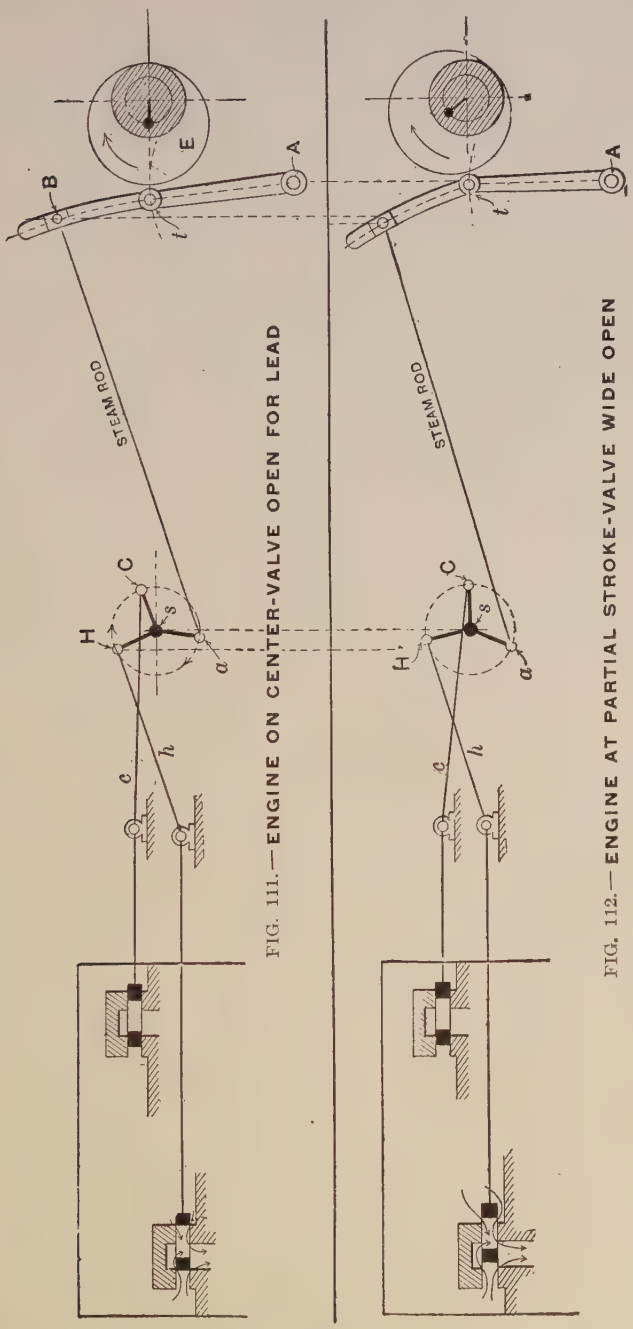


FIG. 111.—ENGINE ON CENTER-VALVE OPEN FOR LEAD

FIG. 112.—ENGINE AT PARTIAL STROKE-VALVE WIDE OPEN

strokes. This may be demonstrated by marking both crosshead and guide at cut-off on the forward stroke, and making a second cut-off mark on the guide the same distance from the dead center on the return stroke. When the crosshead reaches this second mark, on the return stroke, the valve should just close the port.

It will be seen that the position of the trunnions, or, in other words, their vertical adjustment, is an important matter. To provide for accurate adjustment and to allow for wear of the shaft or other bearing, the pin on which these trunnions are pivoted is adjustable by the wedge *k* and bolt *S*, shown in Fig. 110. If the trunnions are not in line with the center line of the eccentric, the travel of both steam and exhaust valves will be affected and inequalities in all the functions will result.

Further adjustments, shown by the indicator to be necessary, may be made by lengthening or shortening the valve stem at the socket near the guide shown in Fig. 106. The chest need not be opened. The exhaust valve motion is imparted by nonadjustable links and rocker arms; all that is necessary is to measure out on the guides, from each dead center, a distance equal to the point of compression. Then place the engine on the forward stroke to such a position that the mark on the crosshead coincides with this point of compression; then, by means of the valve stem, set the crank-end exhaust valve line and line with its port. Turn the engine over until the crosshead mark agrees with the compression mark on the return stroke and set the head-end exhaust valve line and line. The distance of the point of compression from the beginning of the stroke may be obtained from the engine builder, as may also the lead. When these are not known, adjustments in the proper direction must be made from a series of indicator diagrams, continuing the adjustments until the diagrams show the proper outlines.

Each valve is held between two pairs of nuts, the inner ones of which are flanged. When the valve is properly set, screw the inner nuts up to the valve just enough to take up lost motion without pinching the valve, and set up the outer or lock nuts tightly against the inner ones.

Before replacing the chest covers after making adjustments, it is well to turn the engine slowly throughout an entire revolution, with the governor blocked up to the running position, and see that lead, cut-off, release, and compression take place correctly and that all parts move free and clear. A further trial with the governor clear up should show no steam opening except for lead.

## XI

## THE FITCHBURG ENGINE

The most distinctive feature of the Fitchburg steam engine is the valve motion, valve and governor design being next in importance. Although the designers and builders of these engines advocate moderate piston and fly-wheel speeds, the valve motion and governor are adaptable to all high speeds required of reciprocating engines. The number of this type of engine in use makes a study of its distinctive features worth the operating engineer's while.

The general arrangement of the valve gear is shown in Fig. 113. The steam valves act separately, being operated by the governor eccentric by means of the rods *A* and *B* and the cranks *C* and *D* driving the cams by means of wrist cranks on the opposite ends of their shafts. The exhaust valves are on one stem actuated by a fixed eccentric on the engine shaft through the medium of the rods *E* and *F*. It will be noted that the exhaust eccentric and valve rods are so located that the movement of the eccentric is transmitted directly to the valve.

Both steam and exhaust valves are adjustable to wear. The adjustment will be understood by reference to Fig. 114, which shows the details of one of the steam valves. A lengthwise section of the valve and the valve chest is shown in the lower figure, and the valve is shown removed at *J*, while a cross sectional view of the outer shell with tongue and inner cone is shown in the upper right-hand corner.

The construction of the valve, as shown in the lower view, consists of the valve stem *A*, on which the valve parts are kept in place by the nuts *B*. The follower rings *C* and *D* fit into and bind in place the taper cone *E E*, which is used to set out the expansible ring *F F*. Adjustment bolts *G G* are used in connection with adjusting the valve to wear.

To adjust the valve, first slacken the nuts *B* just enough to allow the ring *F* to expand slightly, then to expand it slacken the bolts *G G* and run the set screws *H* in until the required expansion is accomplished. If the first trial is not sufficient, continue until the proper adjustment is reached. If it is too tight, reverse the process by first slackening the set screws *H* and tightening the bolts *G*. While setting up or slackening the adjustment, keep trying the valve by rocking it back and forth with the

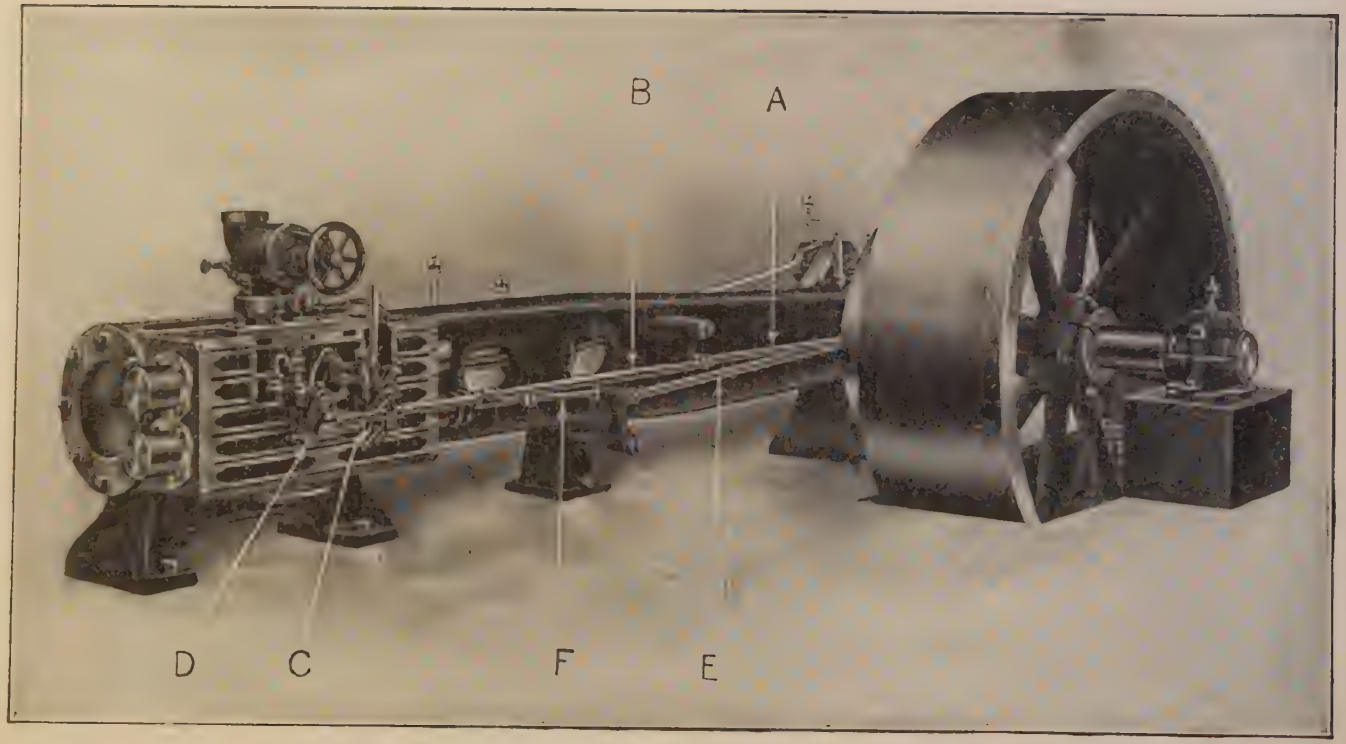


FIG. 113. — THE FITCHBURG ENGINE, SHOWING THE VALVE GEAR.

starting bar. After the adjustment is completed tighten the nuts $B$ and then see that the screws and bolts $G$ and $H$ are tight and evenly set up all

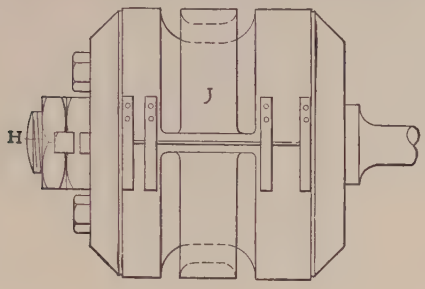


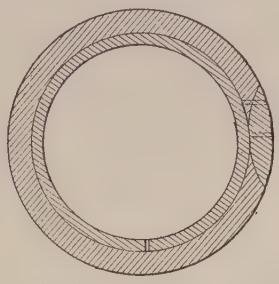

Sectional View of Packing Rings

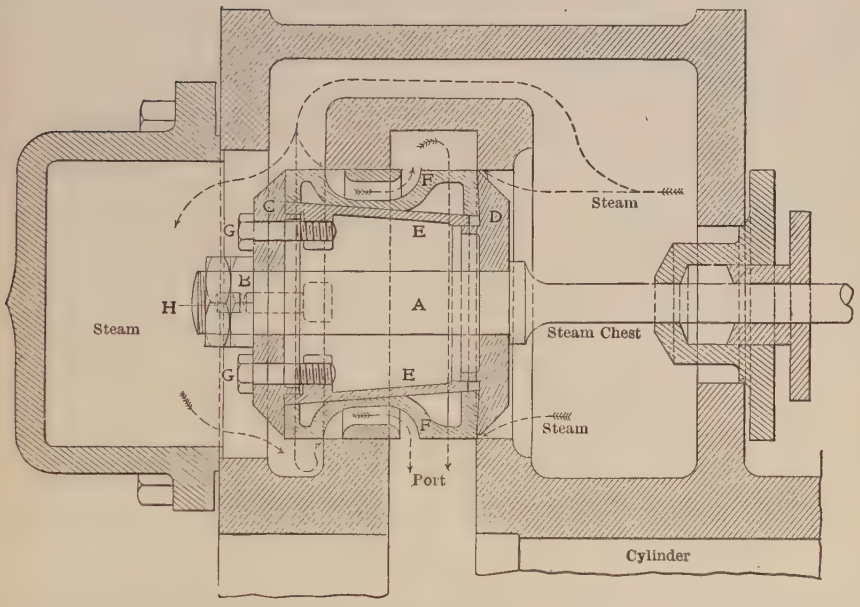


FIG. 114. — LENGTHWISE SECTION OF STEAM VALVE, ALSO THE VALVE REMOVED, AND A SECTION SHOWING TONGUE.

around. This method of adjustment applies to both steam and exhaust valves.

### The Separate Steam and Exhaust Valves

The separate steam and exhaust valves are shown in Fig. 115. The exhaust valve $A$ is not usually ported while the steam valve $B$ is double-ported and balanced, as shown in Fig. 114. In Fig. 115 the valve motion

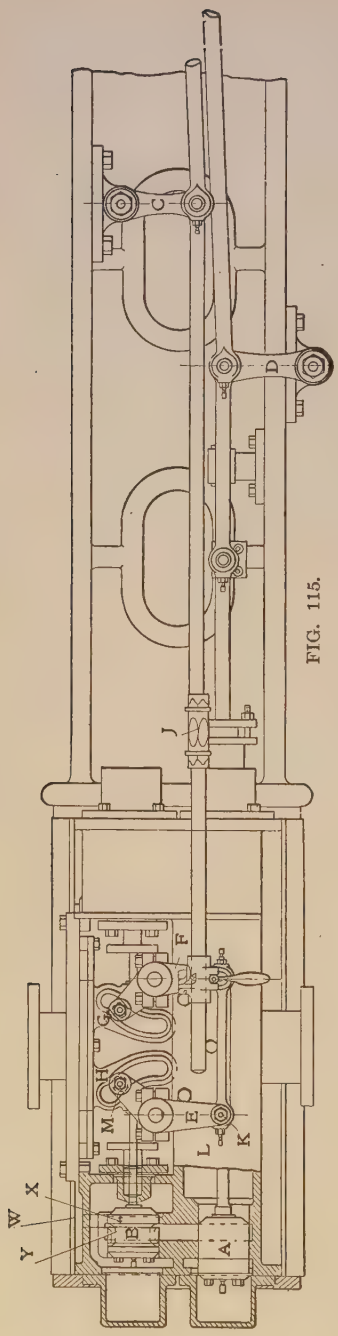


FIG. 115.

is shown in the center of its travel, with the valves lapped. While in this position the rocker arms *C* and *D* and cranks *E* and *F* should be vertical, or at exact right angles with the center line of the engine, with the cams *G* and *H* as shown and the valve rod so adjusted that the valves have their proper lap. When all the rods are properly adjusted as to length the rocker arms and cranks will travel an equal distance on each side of the center line on which they rest in this cut. The nut *J* on the steam reach rod has a right-and-left thread in it and by loosening the lock nuts and turning the center, the length of this rod can be altered to bring the cranks in line.

In Fig. 114 the steam valve is shown in the position where it is just opening (the arrows denoting the direction of the flow of steam). Fig. 116 shows the same valve opening; note the position of the cranks here. They are both at a middle position of travel in one direction. The governor eccentric is now at middle throw. One steam valve is opening and the other one is closed. When the positions are reversed and the eccentric is on the other center, the steam valve here shown open will be back in the position shown in Fig. 115, while the crank-end valve will be open.

The exhaust valves are to be evened up on their rods and their eccentric so set that they close and open alternately at about seven eighths of the engine stroke.

It will be noted that the extreme steam-valve travel is equal to the steam lap and nearly the width of main port (Fig. 115). The steam valve is given this travel through the medium of the cams, and herein lies the peculiarity of this valve motion.

The largest part of the cam slot is of the same radius as the circle that the driving pin and roll on the wrist crank pass

through, so that when the pin is moving down and away from the steam chest and back again to the position shown in Fig. 115, the valve is at rest. This is for a period of one half the engine revolution. To prevent a too sudden action of the valve, the slot is just enough off from the point *M* to the end to start the cam and valve in motion slightly before the valve opens.

### Steam Valve is Balanced

As can be seen, the steam valve is balanced by having the steam pressure on all sides, with the exception of the amount of the area of the valve stem on the one end.

This exception acts as an assistant in obtaining quick cut-off for the pressure on the outside end of the valve is just enough more than that on

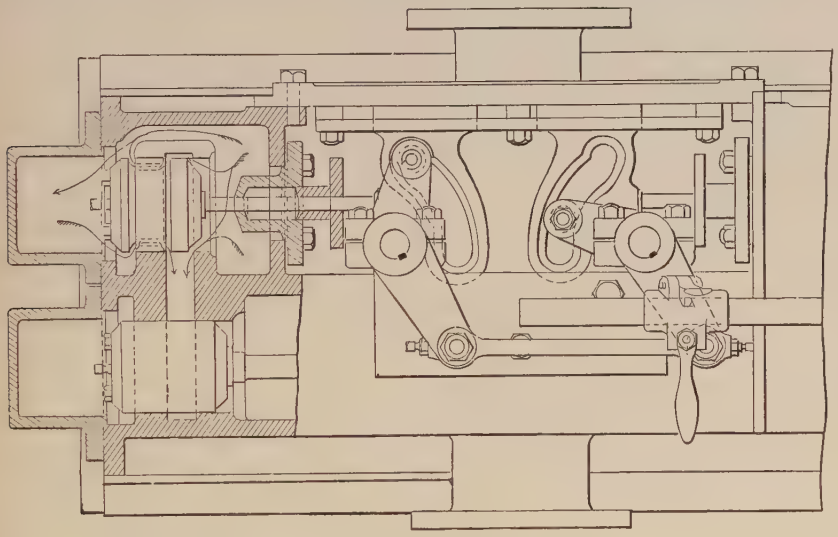

FIG. 116.

the other end to force the valve back without the aid of the cam motion when the return begins. This is evidenced by the fact that when steam pressure is on the cam is kept pressed against the driving roll at all times and after long use there is no sign of wear on the back side of the slot.

The steam valve admits, and the exhaust valve releases, steam over the inside ends. The steam-valve motion is indirect, on account of the cranks, and the exhaust motion is direct. With one eccentric the exhaust valves would necessarily have to release over the outside ends, but as the eccentrics are separate the exhaust release is as stated. For this reason the governor and exhaust eccentrics both lead the cranks.

Fig. 117 shows the relative position of the crank pin and steam eccentric

at about the point *A* on the dotted line *R A*, or it is about 90 degrees plus 37 degrees for lap and lead ahead of the crank, and the exhaust eccentric is approximately at 90 degrees ahead of the crank. This latter fact may be useful to know in the event of a slipped eccentric and the minimum time for adjustment.

Fig. 115 shows both eccentrics at 90 degrees, while Fig. 116 shows the lead of the steam valve distorted, for clearness of illustration, but the valve crank is in the same position as when the crank pin is a little by the center and the eccentric is advanced a little beyond the point shown in Fig. 117. When in this position the steam is cut off at about one-fifth stroke or in full travel about three-fourths stroke. The angle of advance increases as the eccentric is thrown across the shaft by the action of the governor as speed tends to increase, thus accomplishing the regulation of speed. For a full understanding of this action refer to Fig. 117. The action is as follows: As long as the engine is below speed, the eccentric is kept in its longest throw by the tension of the springs and steam follows about three fourths of the stroke, but as soon as the proper speed is reached centrifugal action causes the weights *H* to overcome the tension of the springs and to move outward, at the same time lengthening the springs; by means of the connecting rods *G G* the outward motion of the weights turns the suspension arms *C* upon their fulcra and through the ears *B* the eccentric is carried across the shaft from *S* toward *R*, and as the arcs described by the centers *B B* are in opposite curves they compensate each other, and the center *S* of the eccentric follows a straight line in its movement, preserving a constant lead opening or otherwise as desired. This manifestly decreases the eccentricity, and increases the advance of the eccentric, giving an earlier cut-off to the valve until, when the eccentric is swung squarely back of the crank, the valve opens only the lead, there being all points between this and extreme cut-off for variation. Upon the least diminution of speed the springs have more power than the centrifugal force of the weights, and the motion of the parts is arrested and turned in the opposite direction, giving a later cut-off, as more work is performed by the engine.

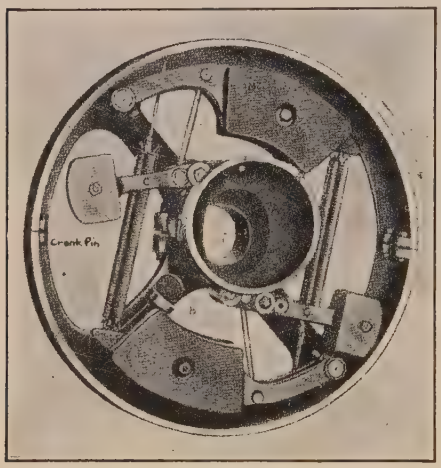


FIG. 117.

## How to Set and Adjust the Valves

Having now discussed the motion, the idea is to get a working knowledge of how to set the valves and adjust them and the governor for various conditions.

The builders give the erecting men a set of instructions for their guidance when first setting up the engine, extracts of which, given herewith, should with the foregoing afford a working knowledge of the adjustment of these engines, under any conditions, to the operator.

The location of the governor case is determined by placing the engine on one dead center and rolling the case around the shaft until the offset of the eccentric is on the opposite side of the shaft from the crank pin. Then roll carefully into such position that when (with the springs re-

FIG. 118.

moved) the eccentric is thrown back and forth across the shaft, no end motion is given the valve rod. At this place tighten the governor case firmly upon the shaft and roll the shaft to the opposite dead center and again move the eccentric back and forth across the shaft, and if there is at this end any end motion to the valve rod change the position of the governor case on the shaft enough to make the motion just half as much, then fasten the governor case firmly in this final position by drilling into the shaft for the point of the set screw and then tightening the clamp bolts to place solidly. Put in the springs and tighten them until the proper number of revolutions is obtained, being sure to tighten up the springs that go through the counterbalance which hangs nearest the springs (when the governor is at rest) about three fourths of an inch more than the springs on the other side.

The travel of the exhaust valves can first be evened up, before their eccentric is tightened upon the shaft, by rolling the eccentric around the shaft to its extreme throw at each end. It should then be set so that the

port is just closed when the crosshead has traveled a little less than seven eighths of its stroke, and the set screw firmly screwed upon the shaft.

To adjust the steam valves, place the latch of the hook in the center of the half spiral slot and clamp the hook firmly by its lever, evening up

FIG. 119.

the movement of the wrist cranks by the right and left nuts in the valve rod, so that in a revolution of the engine shaft they rock evenly each side of a vertical line drawn from centers of their shafts; set the engine exactly on the head center and move the small valve rod attached to the head valve in or out of its cam until the port is opened the proper lead (in usual cases $\frac{1}{16}$ of an inch), and tighten the set screw in the neck of the cam upon the rod firmly. Roll the engine to opposite center and

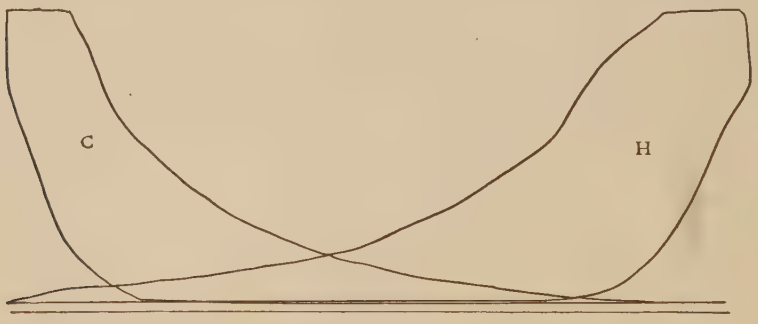


FIG. 120.

set the other valve in the same way. After the valves are thus set as closely as possible they should, if practicable, be adjusted by use of the indicator when the engine is under partial or full load, as no mere measurements can ever set the valves exactly right in any engine. The exhaust valves of the low-pressure cylinder can be set the same as for the high-pressure cylinder.

The shaft governor depends for its action upon the centrifugal power of the two weights nearest the rim, which, through the connecting rods, move the counterbalancing weights to which the eccentric is attached and thus carry the eccentric across the shaft, altering the throw of the valve rod and the point of closure of the admission valves. The centrifugal power of the weight arms is exerted against the springs, and as the point of cut-off is earlier the more the weight arms are thrown out toward the rim it follows that to increase the speed of the engine, the springs must be tightened or the weight reduced; and to decrease the speed, the springs must be loosened or the weight increased. The springs should not be stretched much over 1½ times the length of the coil when unstretched. The engine can be changed several revolutions by adjusting the tension of the

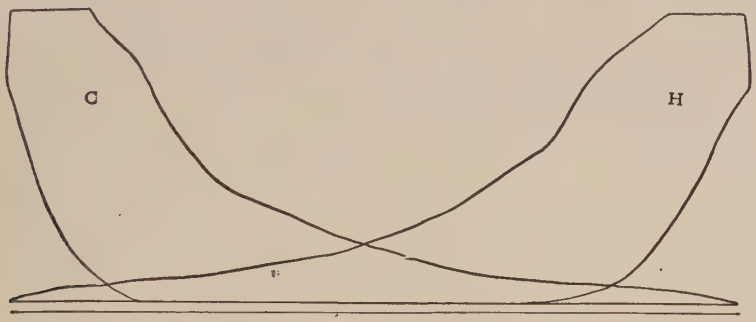


FIG. 121.

springs, but if a marked change is desired, confer with the builders and they will direct what should be done. Care should be taken that a little even friction be maintained between the face of the eccentric and the governor case to prevent dancing, and this is secured by the springs and washers on the ends of the pins which carry the counterbalance weights. Once adjusted they are right for a long time.

Adding to the centrifugal weight arms and increasing the tension of the springs make the governor more sensitive. Do not make radical changes in the weights or springs of the governor without consulting with the builders.

### Practical Illustration of Setting Valves

An illustration of valve setting on this type of engine is given in the following experience. On indicating the engine a friction-load diagram such as is shown in Fig. 118 was taken. The head-end diagram showed some 30 lbs. less initial pressure than on the crank end, the lead was late and the cut-off early. To even up the initial pressure on the two ends, the reach rod to the wrist cranks was shortened by turning

the nut *J*, Fig. 115. This had the effect of more lap on the head-end steam valve and less on the crank end, giving the diagram in Fig. 119, where the initial pressures were brought within 8 lbs. of each other by the change. It will be noted that the head end had the latest cut-off by the change. Before making further changes, the diagram Fig. 120 was taken with about one-third load on the engine. Under these conditions the initial pressure is about equal, with the cut-off still late on the head end.

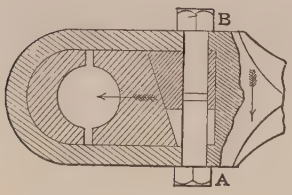

FIG. 122.

The valve stems enter the cams a straight fit and are secured by a set screw. The crank-end valve stem was loosened up in the cam and set out a trifle to give the effect of less lap. The diagram Fig. 121 was then taken under the same conditions as Fig. 120 and shows the cut-offs to be about even.

In conclusion it may be well to mention that in keying up any of the pin bearings of this engine a wedge adjustment is used. On both ends of the connecting rod is a box, shown in detail in Fig. 122. To set up on these boxes, loosen the bolt *B* and tighten *A*. A good way to work this adjustment is to slacken *B* to a considerable extent, then with the flat side of the wrench tap it down lightly until it seems tight, then take up the slack on the bolt *A* just enough to know you have it set up, then screw *B* down into place, setting it up tight.

The arrow marked on the outside end of every box connection denotes the direction the wedge should be moved to take up lost motion. To slacken, reverse the above operation. Fig. 123 shows the crosshead of these engines where the adjustment of the shoes is the same. On the end of the gibs arrows are stamped, which also denote the direction to key up the wedge.

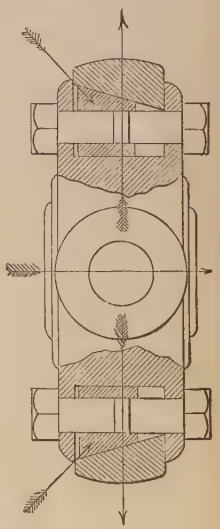
FIG. 123.

## XII

## THE FLEMING PISTON-VALVE ENGINES *

To set the valves of a Fleming piston-valve engine, it is necessary in the first place to get reference marks on the fly wheel corresponding to the dead-center positions of the piston. The method of obtaining these has been so frequently described that it seems almost unnecessary to repeat it here. We will, however, give the method, since it constitutes a part of the operation of the valve setting.

Turn the engine in the direction it runs until the piston is within, say, an inch of the end of the stroke; tram the fly wheel from some fixed point,

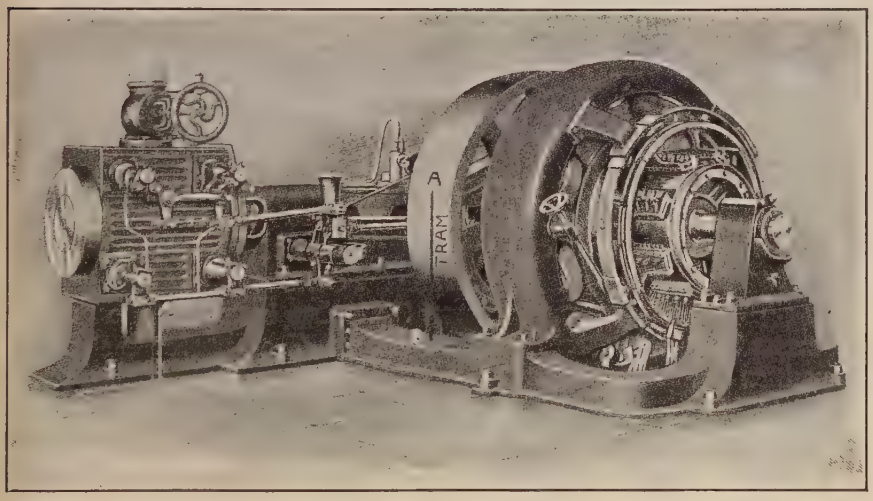


FIG. 124.

such as the subbase extension, and make a center-punch mark at each end of the tram, as at *A* and *B*, Fig. 124. Now make a mark on the edge of the lower crosshead shoe and one exactly in line with it on the lower guide; then turn the engine in the direction it runs until these two marks coincide again. Tram the wheel again from the same point, *B*, on the extension, making a center-punch mark on the rim. Now find a point midway between the marks on the wheel with a pair of dividers. Turn

* Contributed to *Power*, by Thomas Hall.

the engine over until the tram just reaches this central point on the flywheel rim, and you will have the dead-center position of the crank for that end of the stroke. Use the same method to find the other dead center.

After the centers have been located, remove the valve from the steam chest or valve chamber, and make an accurate templet of the "head end" and "crank end." Such a templet is shown by Fig. 125. Also make a correct templet of the valve seat, in the valve chamber, making one end of the templet even with the face of the valve chamber, Fig. 126. Mark the ports, head end and crank end, showing both edges of both ports and the face of the valve chamber, as shown by Fig. 127, where $E$ represents the exhaust edges, and $S$ the steam edges.

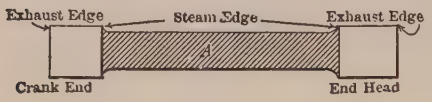


FIG. 125.

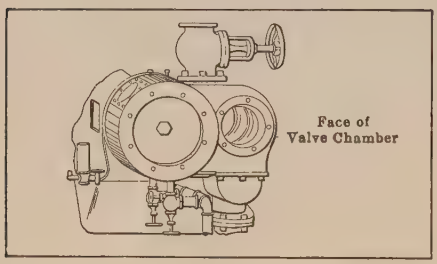


FIG. 126.

These templets can be made from any light material, such as sheet zinc, sheet tin, thin strong pasteboard, or thin wood strips, but the edges, if made of wood, to insure accuracy, should be made of knife-edge form.

After the templets have been made, the valve can be placed back in the valve chamber and connected up, locating approximately. Now turn the engine on one of the dead centers and proceed to adjust accurately.

Fig. 128 shows the governor wheel on the crank-end and center position for a right-hand engine running over, the broken horizontal line through the center being the center line of the engine. The governor is shown in its position of minimum travel by the dotted lines, and of maximum travel by the full lines. Block the governor in its minimum position, turn the engine onto the crank-end center, take measurement from the end of the valve to the face of the cylinder, as shown by Fig. 129, and transfer this measurement to the templets, as shown by Fig. 130, when the amount of

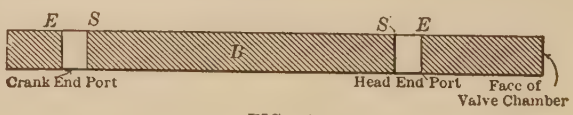


FIG. 127.

lead for the crank end can be readily seen and measured from the templets. The amount of lead will vary with the size of the engine and the steam pressure used, from $\frac{1}{32}$ to $\frac{1}{8}$ of an inch on the head end, and practically double this amount on the crank end for noncondensing engines.

On condensing engines with the governor in this position and the crank on the head-end center, the valve will have from $\frac{1}{64}$ to $\frac{1}{16}$ of an inch lap, or negative lead, according to the size of the engine and the steam pressure used, and should be about line and line on the crank-head center. The lead increases considerably as the point of cut-off increases.

Upon turning the engine over in the direction in which it runs, with the governor in its minimum travel position, until the greatest movement

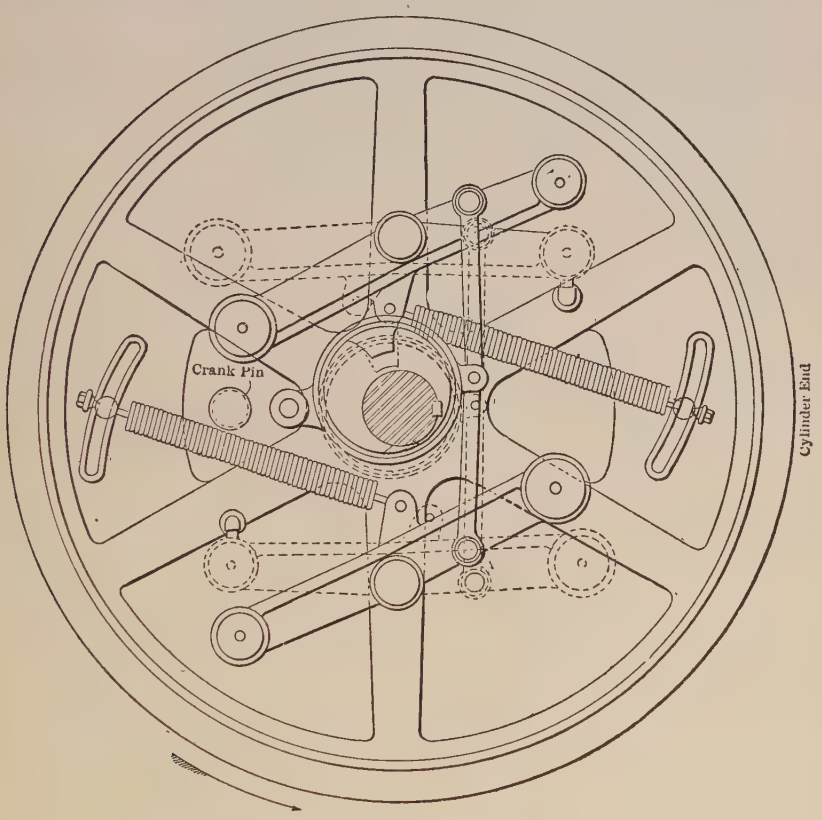


FIG. 128.

of the valve is obtained, the opening must not be sufficient to cause the engine to run away when the load is thrown off; i.e., it should be more than sufficient to overcome the friction of the engine. In order to insure this, the lead or port opening for this position of the governor should be but little, if any, greater than that specified above.

The blocking of the governor should now be changed, fixing it in such a position as will give about $\frac{1}{3}$ cut-off, approximately the point of cut-off corresponding to the rated load. This point of cut-off should be located

on the guides by making marks on the lower guide line with the mark on the crosshead shoe for each dead-center position, and dividing the distance between them into three equal parts. Now turn the engine over until the mark on the crosshead shoe is in line with the new point of the guide, corresponding to $\frac{1}{3}$ cut-off for the head end. You should now block the governor so that the valve is line and line at the steam edge by taking the measurements from the templets as above described.

Next turning the engine over until the valve shows the cut-off on the crank end, when it will be noted that the crosshead has not traveled the full $\frac{1}{3}$ stroke, as indicated by the crosshead and guide marks, by from $\frac{1}{2}$ to $\frac{1}{4}$ of an inch, depending upon the size of the engine. An adjustment of the valve endwise will, of course, lessen this amount, but will increase the differences in lead between the two ends, so that this adjustment must be made to the best advantage, lead and cut-off considered.

To determine the greatest port opening for any point of cut-off, the governor can be blocked for the desired cut-off and the engine turned over until the valve begins to change direction, and you will have the position of maximum port opening for that particular cut-off.

In valve setting always turn the engine over in the direction it runs, never turning it past a point you desire to measure and then turn back to it, as the lost motion will affect accurate adjustment.

To get the point of cut-off, or to get the position of admission, place the templet of the valve on the templet of the ports to a position where the steam edge of the valve is in line with the steam edge of the port. Take a measurement from the end of the templet corresponding with the face of the cylinder to the end of valve, and transfer this measurement to the valve in the valve chamber, as shown in Fig. 129. Block the governor in such a position that this measurement corresponds to that just taken from the templet. The maximum cut-off is usually about $\frac{3}{4}$ stroke.

It is advisable, but not absolutely necessary, to determine by measurement all events of the stroke including lead, port opening, cut-off, release, and compression, and make a note of each measurement for both ends of the stroke, so as to make ready comparison. Release will be earlier on the crank end than on the head end, and compression will be earlier on the head than on the crank end. Both of these events by measurement will probably be uneven by from $\frac{1}{2}$ to 1 in., depending on the size of the engine and the point of cut-off considered. The nearer to the end of the stroke these events occur, the less will be this difference.

If great care is taken in setting the valves by the use of templets, when an indicator is placed on the engine and cards taken, there will be little adjusting to be done. There is no reason why an engine cannot be set in good running condition by the above method without the assistance of an indicator if the work is carefully done.

## Compound Engines

In taking up valve setting on compound engines, the first point to consider is what work the engine is designed for, what steam pressure it is to work under, and whether it is to run condensing or noncondensing.

With regard to tandem compounds, we will consider the two types of a valve gear; first the one in which the valves in both high- and low-pressure cylinders are controlled by the governor. In this type of engine the setting of the valves is practically the same as for the simple engine.

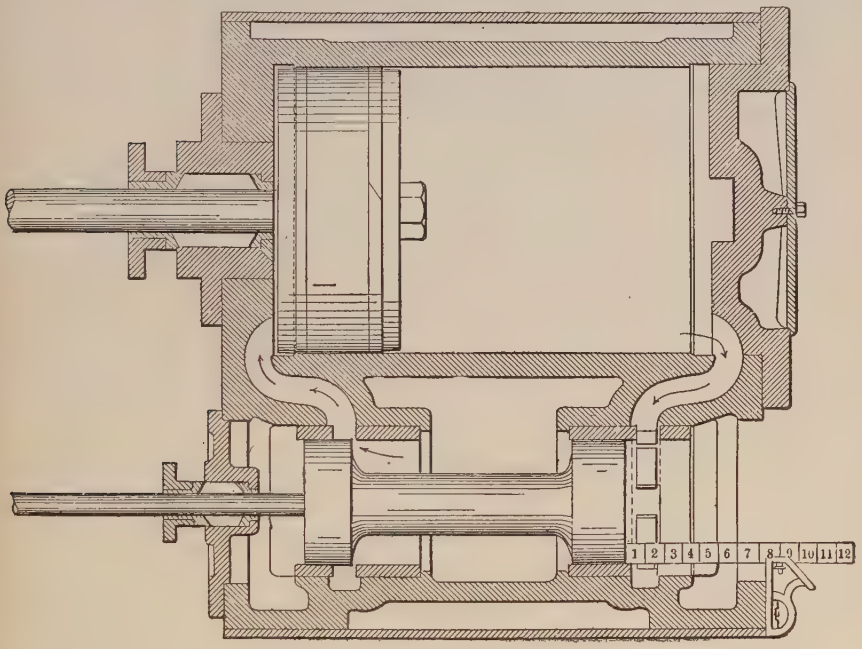


FIG. 129.

Of course both valves in the high- and low-pressure cylinders would be set independently, giving each its proper amount of lead; but since the governor controls both high- and low-pressure valves, we have an increased lead, as the cut-off becomes later for both valves. The load for the high-pressure valve should be practically the same as for the simple engine, while that of the low-pressure cylinder is usually from three to four times this amount in order to get the cut-off late enough and give ample port opening.

A condensing engine has usually a higher cylinder ratio and cuts off earlier in the low-pressure cylinder than a noncondensing engine, so that the low-pressure valve of a condensing engine should have less lead than

a noncondensing engine. Compression rises less rapidly in the low-pressure cylinder of a condensing engine than in a noncondensing engine, so that compression should start earlier in the stroke of a condensing engine; this, of course, throws the release later in the low-pressure cylinder of a condensing engine than a noncondensing engine.

It would be difficult to state here how much lead to give the low-pressure valve, as we would have to take some specific engine working under some fixed conditions. In this type of engine the load will remain practically uniformly divided between the cylinders throughout the full range of cut-off from minimum to maximum.

The above construction, where the governor operates both valves, is seldom used except on small engines. It is not quite as flexible for adjustment as where the low-pressure valve is operated by an independent eccentric.

With an engine of this type, where the valve on the high pressure is operated by the governor, and the valve on the low pressure by a separate

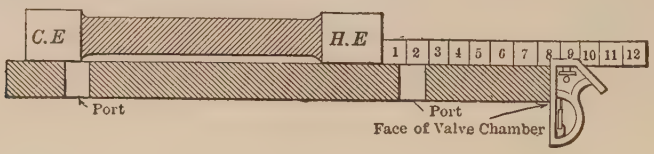


FIG. 130.

eccentric, as shown by Fig. 131, proceed to set the high-pressure valve in the same manner as that of a simple engine. Fig. 131 shows the eccentric used on the low-pressure valve in its position of maximum travel with relation to the crank for a right-hand engine running over. This eccentric is so constructed that its center, when adjusted, travels across the shaft, thus changing the cut-off in the same manner as in the high pressure.

In Fig. 131, *C D* is a line running through the center of the crank shaft. *A B* is a line running through the eccentric center and its point of suspension. If the eccentric is so arranged that the center line of the eccentric, *A B*, is brought over or made to coincide with the center line *C D*, you will have the eccentric at its minimum point of cut-off.

To set the low-pressure valve, first locate the eccentric at its point of minimum cut-off, or, in other words, have the points *G H F* and the crank (low-pressure crank if it be a cross compound) in a straight line. Fasten the eccentric with the set screws *I* and *J*, then turn the engine over in the direction in which it runs and test for the lead, point of cut-off, etc. For the best adjustment, have the point of suspension *F* slightly behind the crank, so that when the eccentric is moved by the screw in the slot from one extreme to the other, the lead remains nearly constant. Then adjust the

screw $E$ for the point of cut-off desired by giving the eccentric a greater throw and consequently the valve more travel.

The above applies to the cross-compound engines as well as tandem engines, with the exception that, when setting the eccentric on the low-pressure cylinder in a cross-compound, the eccentric must be set with reference to the crank on the low-pressure side.

An early cut-off in the low-pressure cylinder will cause a high-receiver pressure and a late cut-off a correspondingly low-receiver pressure. It is

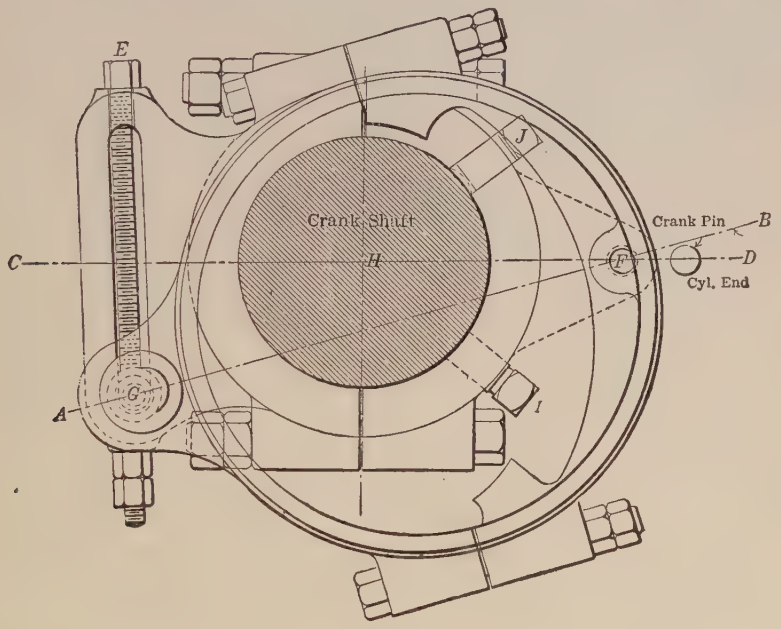


FIG. 131.

advisable to so adjust the cut-off in the low-pressure cylinder, and consequently the receiver pressure, that the load will be evenly divided between the high- and low-pressure cylinders for rated load conditions. For very light loads the high-pressure cylinder will then carry somewhat more than half the load, and for overloads, the low-pressure cylinder will do slightly more work than the high-pressure cylinder.

This is not at all objectionable, either from the viewpoint of economy or otherwise, as repeated tests of these engines have shown. The variation in the division of the load is comparatively slight.

The accompanying table, showing the effect of changing steam or inside lap, exhaust or outside lap, travel and angular advance, for piston-valve engines is appended for convenient reference:

| | Admission | Expansion | Exhaust | Compression |
|---|---|---|---|---|
| Increase Inside Lap | Is later<br>Ceases sooner | Occurs earlier<br>Continues longer | Is unchanged | Engines at same point |
| Increase Outside Lap | Unchanged | Begins as before<br>Continues longer | Occurs later<br>Ceases earlie | Begins sooner<br>Continues longer |
| Increase Travel | Begins sooner<br>Continues longer | Begins later<br>Ceases sooner | Begins later<br>Ceases later | Begins later<br>Ends sooner |
| Increase Angular Advance | Begins earlier<br>Period unaltered | Begins sooner<br>Period the same | Begins earlier<br>Period unchanged | Begins earlier<br>Period the same |

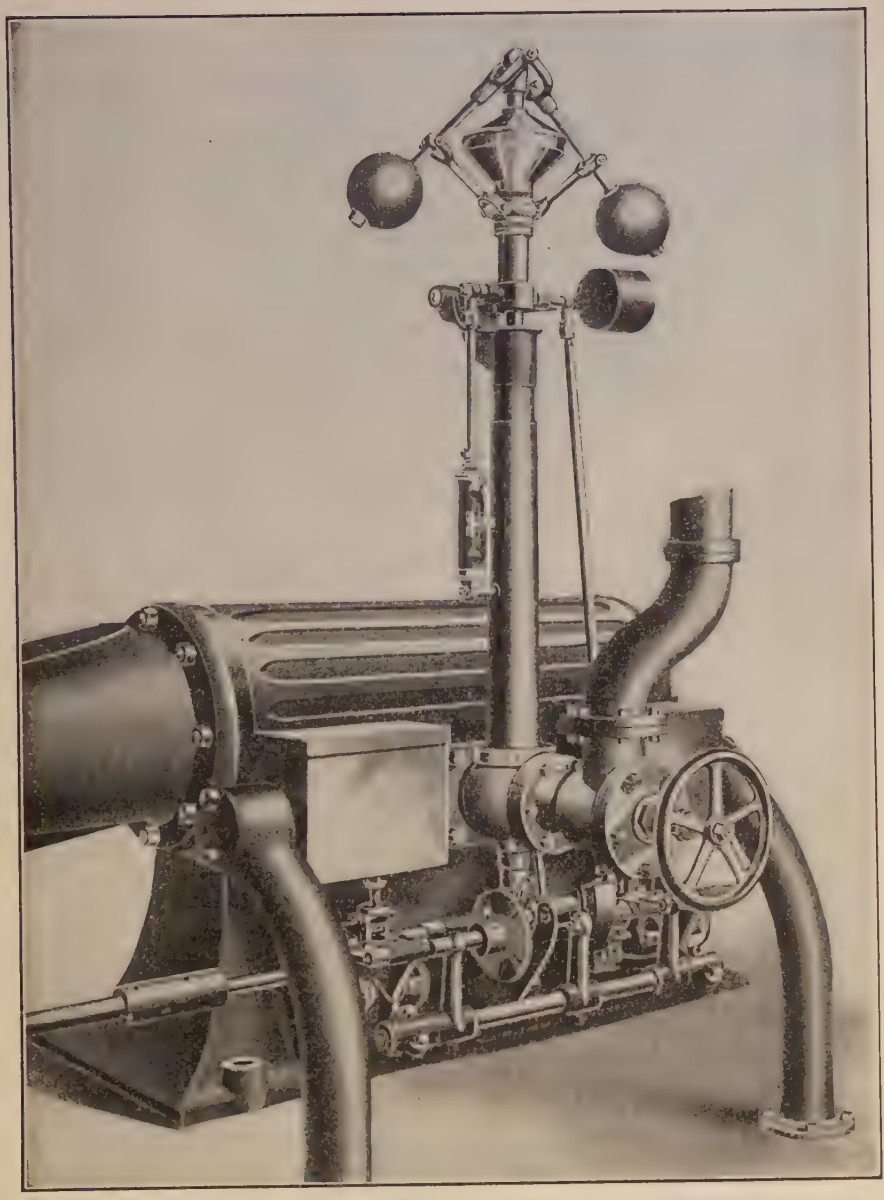

FIG. 132. — VALVE GEAR OF THE PUTNAM ENGINE.

## XIII

## THE PUTNAM ENGINE.*

THE high-pressure, variable cut-off engine built by the Putnam Machine Company, of Fitchburg, Mass., and known as the Putnam engine, presents distinctive valve-gear features which should interest the operating engineer. There are four "double-beat" poppet valves, all operated from a single lay shaft running at one half the speed of the main shaft, with a range of cut-off from 0 to full stroke. A general idea of the valve gear may be obtained by examination of Fig. 132, which shows the back or valve-gear side of a left-hand engine cylinder. A sectional view of the valves and steam passages is shown in Fig. 135. A diagram of the side shaft is shown in Fig. 134, valves 2 and 3 being the steam valves and 1 and 4 the exhaust valves.

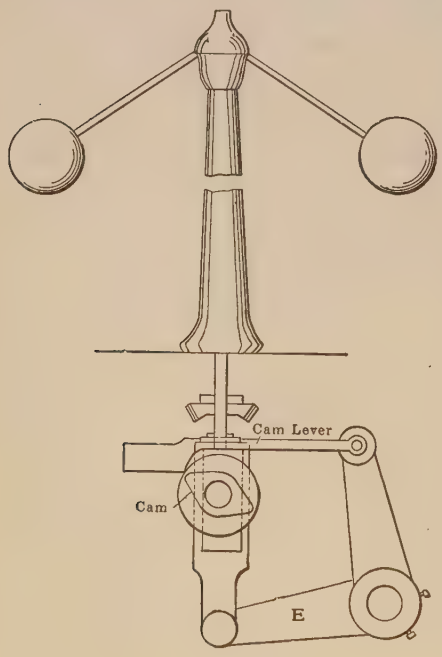

FIG. 133.

To set the valves of a Putnam engine, first attach the regulator to the valve gear, raising the balls of the regulator as high as they will go and holding them in that position (see Fig. 133). Then push in the steam levers of valves 2 and 3 far enough to allow the cams which operate them to be turned around on the shaft, just clearing the levers without lifting the valve as shown in Fig. 133. While the levers of 2 and 3 are in position, tighten the set screws in the rocker arm *E*, Fig. 133, at the bottom of the regulator, when the balls may be lowered (Fig. 137) and the regulator adjustment is complete.

These directions regarding the regulator refer to the old-style regu-

*Contributed to *Power*, by F. L. Johnson.

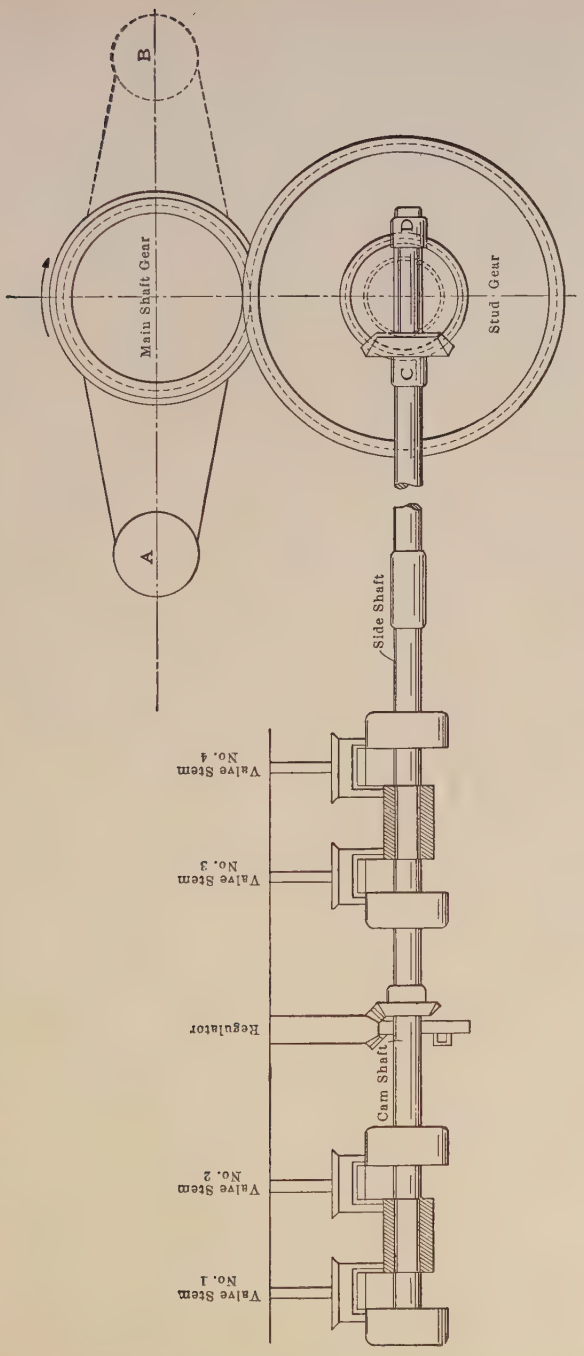


FIG. 134. — DIAGRAM OF SIDE SHAFT.

lator; the new-style regulator, Fig. 136, is somewhat different and is operated in the following manner: After all the connections have been made, raise the balls until the clearance $S$, between the center weight and the collar, is $\frac{1}{4}$ of an inch. Hold in that position and push the levers of 2 and 3 in far enough to allow the cams to operate as with the old-style regulator.

If the engine is to "run over," the bevel gear at the end of the lay shaft should occupy the position of $E$, Fig. 133. If the engine is to "run

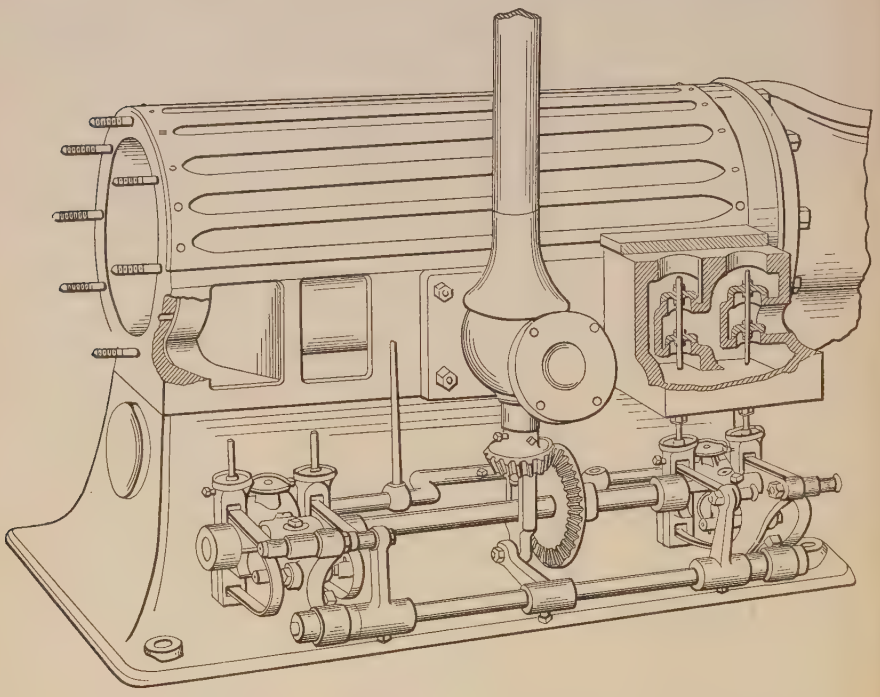

FIG. 135. — SECTIONAL VIEW OF VALVES AND STEAM PASSAGES.

under," the positions of the collar $D$, Fig. 134, and the gear are exchanged. The lay shaft revolves in the same direction in all cases. The changing of the position of the gear changes the direction of rotation of the engine shaft. The question of direction of rotation being settled, the gears are made secure in their respective shafts, and the crank pin put on the center nearest the cylinder.

Beginning at valve 2, Fig. 134, with the valve closed, make a mark on the valve stem $\frac{1}{16}$ of an inch below the packing box, turn the cam by hand in the direction it is run (Fig. 138) until the mark on the valve stem is flush with the stuffing box and make the cam fast to the shaft by means of the set screw. This will give $\frac{1}{16}$-in. valve opening when the crank is

on the center. With the cam of exhaust valve 4 proceed in exactly the same manner as with steam valve 2, except that the mark on the stem should be $\frac{3}{16}$ of an inch below the packing box. Be sure that the set screws in both 2 and 4 are set up securely and the crank is opposite center.

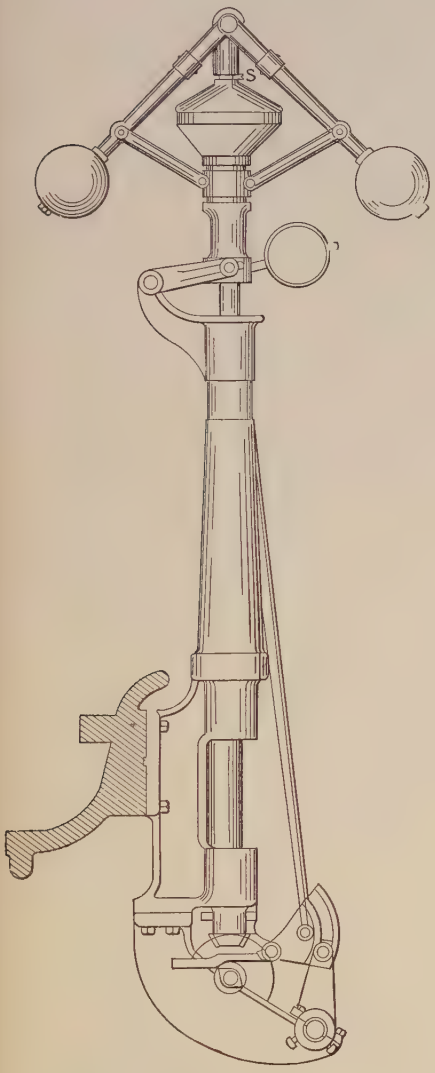


FIG. 136. — NEW-STYLE REGULATOR.

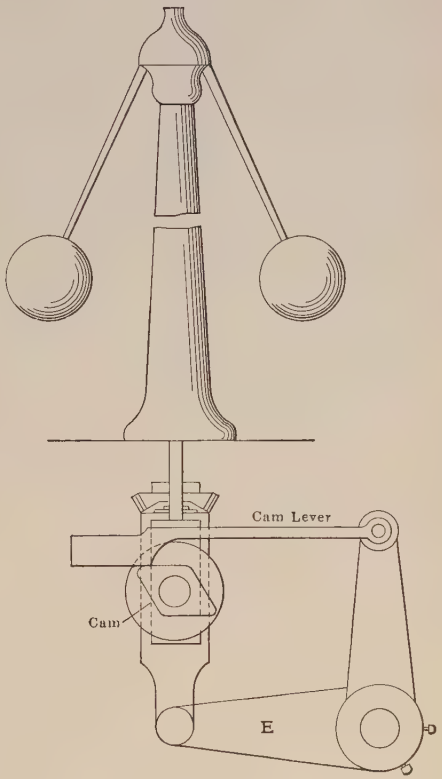


FIG. 137.

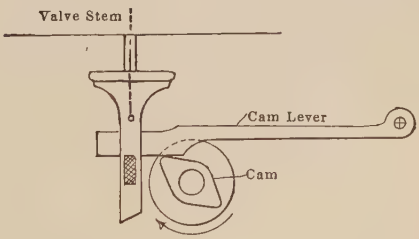


FIG. 138.

Proceed with steam valve 3 exactly as with 2, allowing only $\frac{1}{32}$ of an inch lift to the valve. The reason for doing this is because the piston travels much more slowly in the crank end of the cylinder than in the

head end and does not need the same amount of lead to secure full steam pressure at the beginning of the stroke. Exhaust valve 1 is set the same as 4, with $\frac{3}{16}$-in. rise.

The rock shaft which operates the cam levers of 2 and 3 is provided with leather-lined caps to the bearings, which are intended to furnish the necessary friction to prevent unsteady action of the regulator. These caps should be tightened just enough to produce the desired steadiness and no more, for if undue friction is induced the governor will be prevented from responding quickly to a change of load, and the motion of the engine will be unsteady.

The foregoing instructions are intended to serve for setting the valves as accurately as can be done without the use of the indicator. After the engine is in operation the indicator should be used to check the work and secure accuracy.

## XIV

## THE STURTEVANT COMPOUND ENGINE*

The setting of the valves and the adjustment of the governor and drainage systems of any make of engine may well be preceded by a very brief description of its leading characteristics. As shown by the accompanying sectional view, Fig. 139, the engine in question is of the vertical cross-compound type, with the cranks at 180 degrees.

The high-pressure cylinder has a balanced piston valve working in a removable bushing which contains the ports; it takes steam on the inside and exhausts at the ends; auxiliary ports in the valve (see Fig. 147) increase the port opening, during the admission period, preventing wire-drawing. The piston valve is controlled by an inertia governor which is a modification of the Rites type, therefore the cut-off in the high-pressure cylinder is automatically changed according to the load.

The low-pressure slide valve is balanced by means of a back platen maintained in position by six springs, three of which are shown at *A*, *B*, and *C*, Fig. 140. These springs fit the holes *D*, *E*, and *F* in the valve-chest cover. The low-pressure valve is not connected to the governor, and as the angular advance is constant, the cut-off in this cylinder does not vary with the load, but is fixed. However, the low-pressure eccentric is adjustable; that is, the throw may be changed by the engineer while the engine is not running. The adjustable eccentric permits changing the lead and cut-off, for altering the valve travel alters these events. The low-pressure cut-off occurs at practically one-half stroke for normal load.

It is well to set the low-pressure valve first, for this operation is much easier than in the case of the high-pressure side. It is first necessary to remove the tap bolts and take off the covers leading to the low-pressure valve chest, the crank case, the valve-rod guide, and the eccentric; these are shown at *A*, *B*, and *C*, Fig. 141, and at *D*, Fig. 144. The low-pressure crank pin should be put on the top center, following any of the approved methods. A simple operation which quickly gives the position with sufficient accuracy for preliminary valve setting is to turn the governor wheel by means of the bar until the face *A*, Fig. 142, of the connecting rod is parallel to the front surfaces *B*, *B* of the crank arms.

*Contributed to *Power*, by Carl S. Dow.

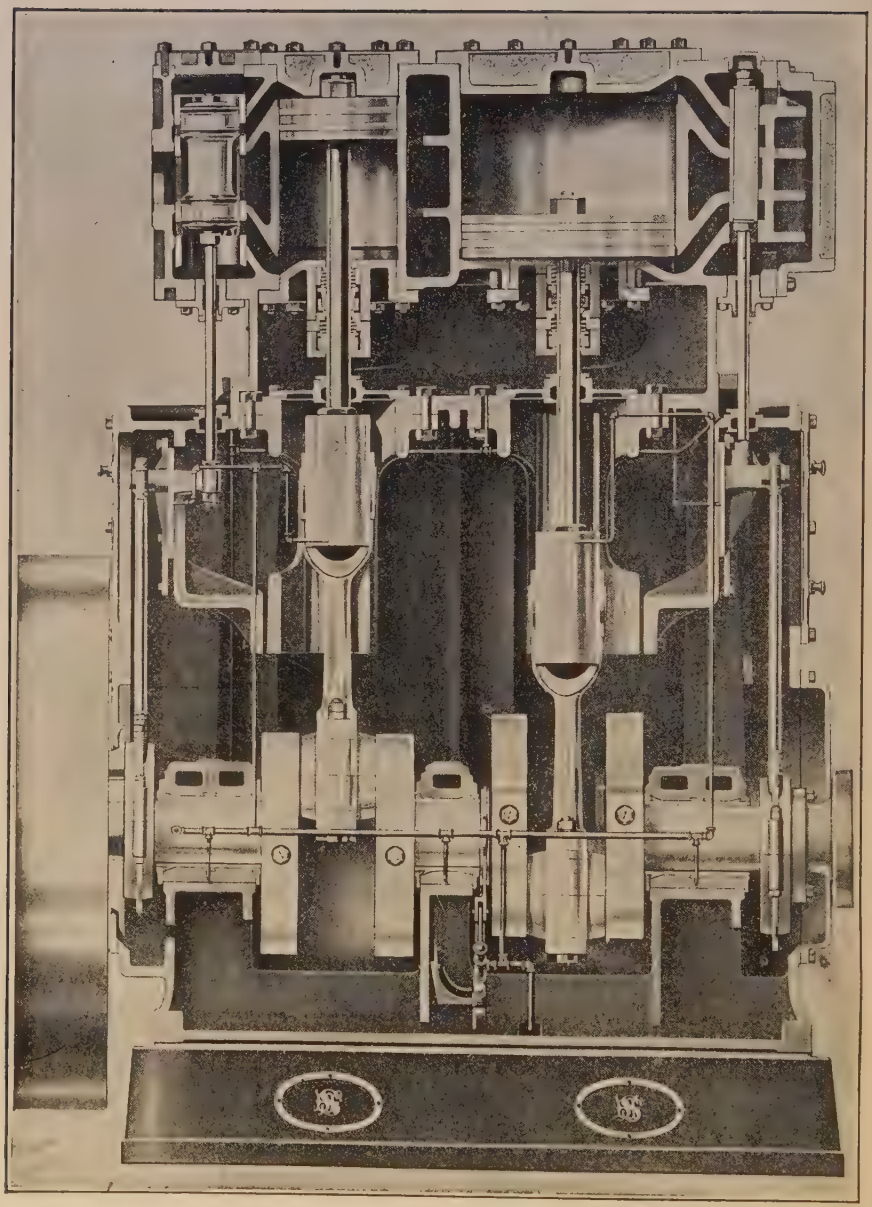

FIG. 139. — SECTION THROUGH CYLINDERS AND VALVES.

The throw of the low-pressure eccentric should now be adjusted, the angular advance having been fixed when the keyway was cut in the eccentric hanger which is shown in Fig. 143. But before this can be done the direction of rotation must be determined. As the observer is now facing the low-pressure end, the engine is running under if turning clockwise. If the engine is to run in this direction (under), move the eccentric, which is fulcrumed to its hanger at $F$, and fasten the pin $P$ at the extreme left-hand end of the slot $S$. This gives the eccentric maximum throw and the valve full travel. Of course the pin $P$ should be fastened at the other end of the slot if the engine is to run over. When the pin $P$ is in the center of the slot, as shown in Fig. 143, the valve has minimum travel and no lead, because the lead decreases as the pin approaches the center of the slot, for this operation decreases the valve travel.

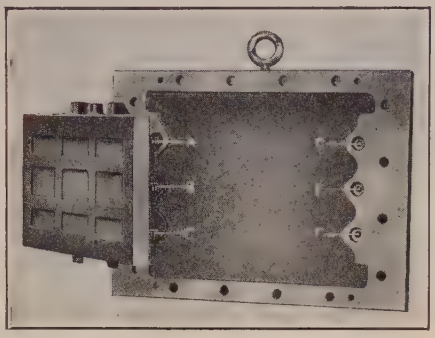

FIG. 140. — BACK PLATEN OF LOW-PRESSURE VALVE.

With the eccentric fixed for full throw and the low-pressure crank pin on the top center, adjust the slide valve for a lead of $\frac{3}{32}$ in. at the top, that is, the narrow opening between the top edge $Y$ of the valve and the lower edge $X$ of the port should be $\frac{3}{32}$ in. See Fig. 141. This adjustment is made by altering the length of the valve rod by means of the nuts at $N$. Both these nuts are shown at the right-hand side of the large section of the engine, Fig. 139. The low-pressure crank pin should now be put on bottom center. The lead at the bottom should be $\frac{1}{4}$ in., or, as shown in Fig. 144, the distance ($M\,N$) between the edge of the port and that of the valve should be $\frac{1}{4}$ in. If not, equalize the error by changing the leads, making one half the difference at the top and one half at the bottom; always re-

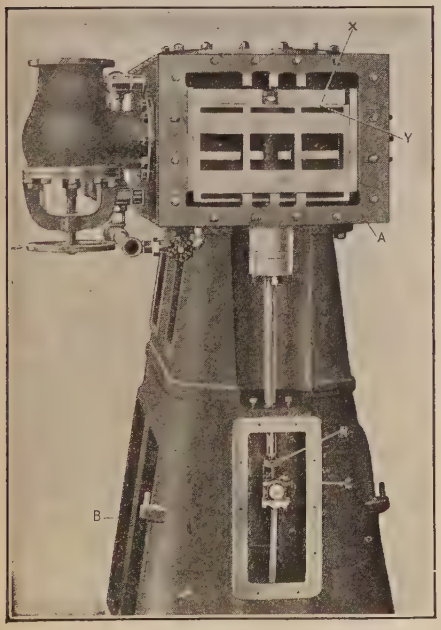


FIG. 141. — LOW-PRESSURE VALVE SIDE SHOWING LEAD ON TOP END.

membering that the bottom should have a little more lead than the top. The low-pressure side is now adjusted.

Before setting the high-pressure valve the governor must be considered. The general appearance of this form of inertia governor is shown in Figs. 145 and 146, the former being a view of the side next the engine. The eccentric is not keyed to the shaft, but is free to move across it because of the slot, thus changing the angular advance and consequently the cut-off. The eccentric and weight arm of the governor are both rigidly fastened to a stud *S*, which passes through the hub of the governor wheel; the eccentric is thus compelled to move with the weight arm and its position varies as the stud moves nearer or farther away from the shaft center, due to inertia and centrifugal force. The disk *D*, Fig. 145, is the oil guard and has nothing to do with the action of the eccentric. When the governor wheel is stationary the tension of the spring is such as to allow the weight *M* to rest against the stop *T*, Fig. 146, in which position the valve has maximum travel and maximum lead.

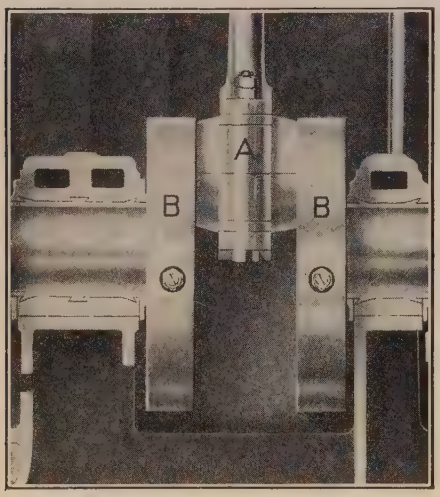


FIG. 142. — AN EASY METHOD OF PUTTING THE ENGINE ON CENTER.

## To Set the High-pressure Valve

To set the high-pressure valve the valve plug *V*, Fig. 146, and the cover at *D* must be removed. With the piston valve enveloped by its bushing, it is impossible to see the valve itself, except at the top, and consequently the lead cannot be measured directly as in the case of the plain slide valve. The setting is accomplished by measuring the distance from the top of the valve to a given surface, which in this engine is the top of the valve chest with the plug or cover removed. The reference edge is shown at *T*, Fig. 147.

Since the piston valve takes steam on the inside, the inside edges of the ports in the bushing are the important ones. Evidently the lead is the distance the inner edge of the valve has moved from the inside edge of the port when the crank is on the center; therefore when the valve is properly set the measurements must show that the desired lead exists in the valve chamber.

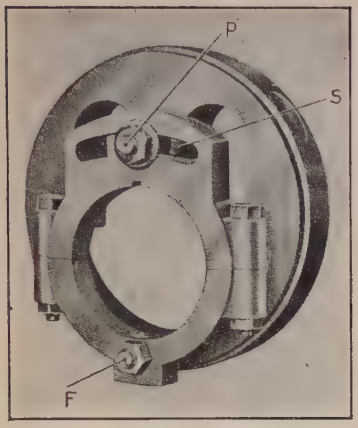


FIG. 143. — ADJUSTABLE LOW-PRESSURE ECCENTRIC.

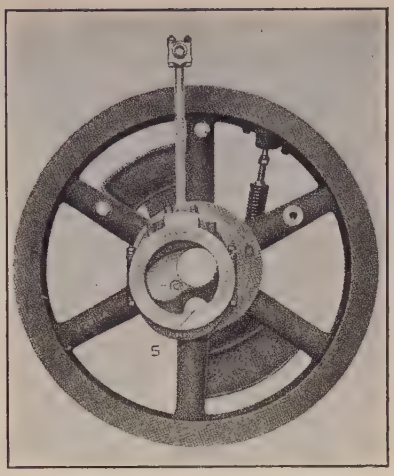


FIG. 145. — THE INERTIA GOVERNOR.

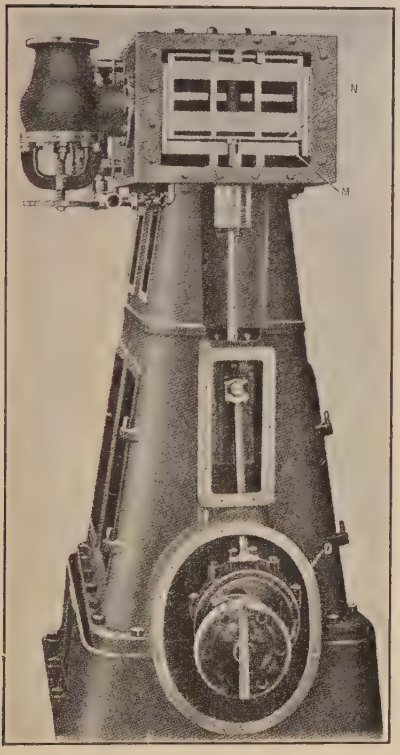


FIG. 144. — LOW-PRESSURE VALVE SIDE SHOWING LEAD ON BOTTOM END.

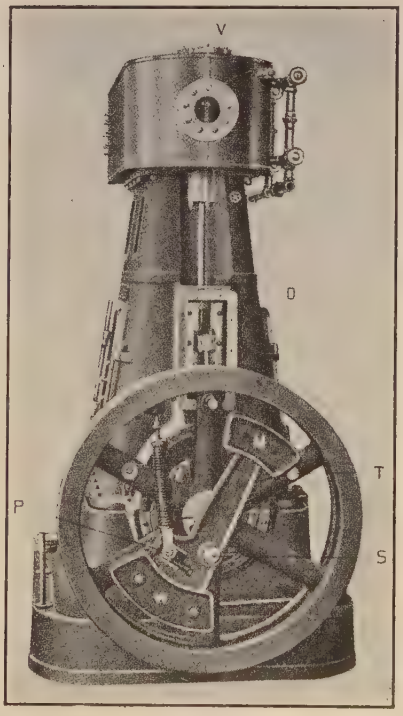


FIG. 146. — THE GOVERNOR IN POSITION.

The high-pressure crank should be placed on the top center. The lower edge of the upper port is $5\frac{5}{16}$ ins. below the top surface $T$ of the valve chamber. Since the thickness of the valve, measured from its top surface to the steam edge, is $2\frac{7}{16}$ ins., the top of the valve should be $3\frac{1}{4}$ ins. from the reference edge $T$, to give a lead of $\frac{1}{4}$ in. This may be shown as follows:

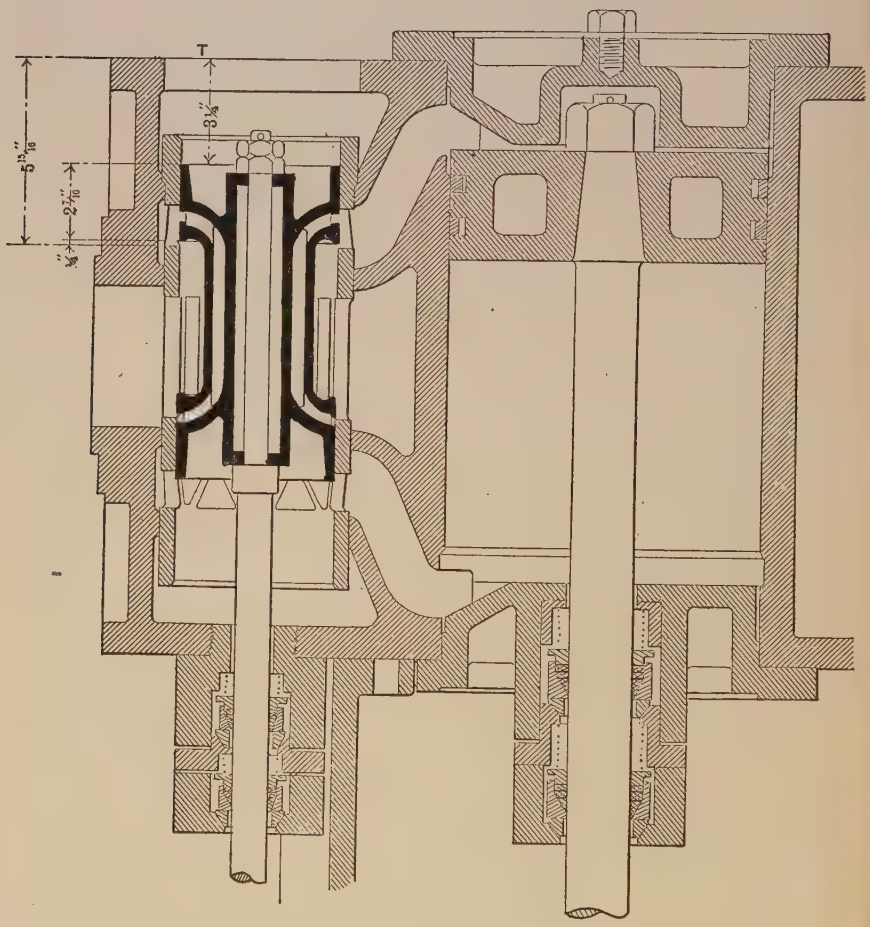


FIG. 147. — THE HIGH-PRESSURE VALVE.

$5\frac{5}{16} - 2\frac{7}{16} - \frac{1}{4} = 3\frac{1}{4}$. It is well to remember in this connection that the valve rises to open, hence the lead ($\frac{1}{4}$ in.) is subtracted from the distance of the top of the valve to the edge $T$ (see Fig. 147).

To set the valve, then, it is only necessary to put the high-pressure crank on the top center and adjust the length of the valve stem to make the top of the valve $3\frac{1}{4}$ ins. from the top of the valve chamber. As in the case of

the low-pressure valve, the stem is lengthened or shortened by means of the nuts on the stem at the slide.

It is not necessary to determine the lead at the bottom, because the valve

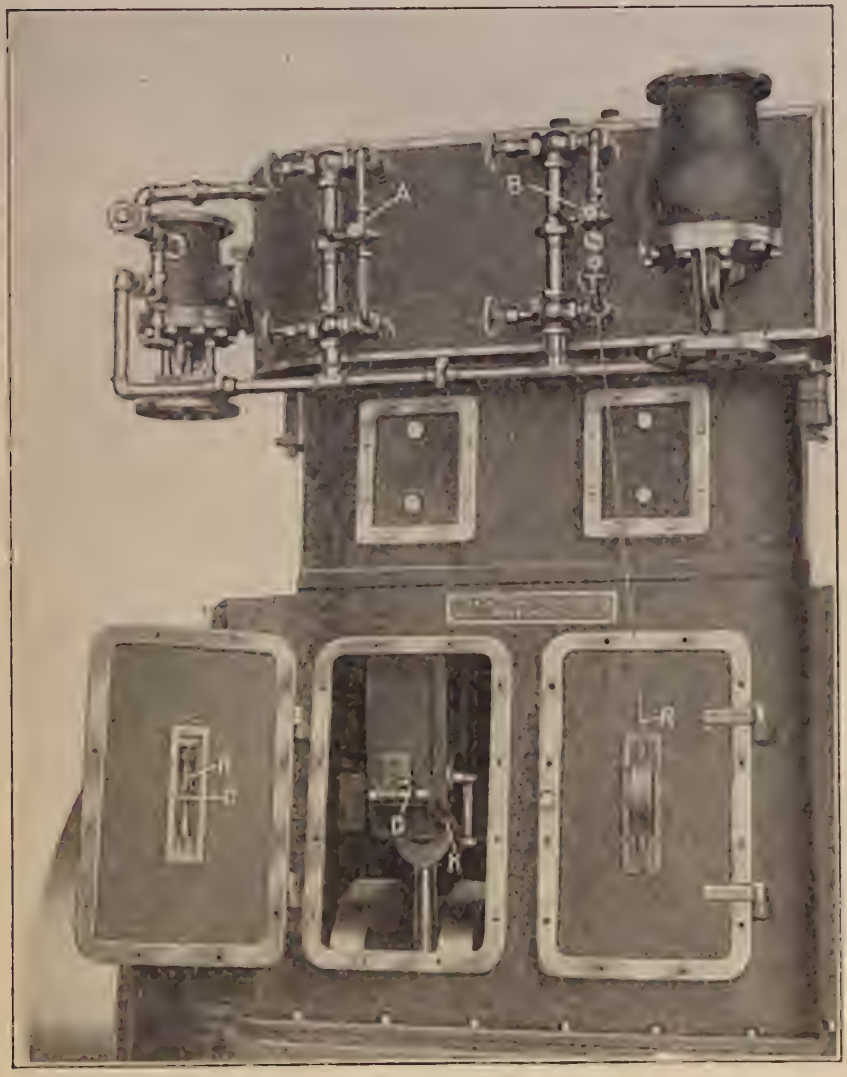


FIG. 148. — THE INDICATOR RIG.

and its bushing are designed to give proper lead at the bottom when the top lead is $\frac{1}{4}$ in. The same method of measuring is followed, the only difference being due to the location of the lower port.

After replacing the covers and connecting the cylinder drains to the sewer, if the engine is to run noncondensing, or to the exhaust pipe if condensing, the start may be made. The reason for connecting cylinder drains to the exhaust pipe instead of to the sewer, or letting the drip go to the atmosphere, is that a vacuum cannot be maintained if the cylinder is thus placed in communication with atmospheric pressure.

In the Sturtevant compound engine there are two drainage systems: one for the cylinders, as briefly mentioned above, and another for draining water of condensation from the stuffing boxes. As shown in Fig. 139, small pipes connect with the depressions at the valve rod and watershed partition stuffing boxes. The condensation collecting at these points is led through the piping, which is wholly within the inclosing frame, and delivered to the sewer. The rest of the piping within the frame is the system of forced lubrication, by which all bearings and sliding surfaces are supplied automatically with lubricant.

To start the engine, if condensing, the air and circulating pumps are first put into operation so that a partial vacuum will be created in the condenser. Meanwhile, a little steam should be allowed to warm the cylinders, the condensation leaving by the cylinder drainage system.

As soon as convenient the indicator should be attached, for the valve setting is not yet final. Fig. 148 shows the indicator rig. The indicators are located at the three-way cocks $A$ and $B$, which allow steam to enter the indicators from the two ends of the cylinders. The reducing motion consists of a rod $R$, moving vertically in a projection on the door, and a rocker $K$, which transmits the crosshead motion to the rod $R$, the free end $D$ of the rocker engaging the rod $R$ at $C$. As shown at the right-hand side of Fig. 10, the rod $R$ is directly below the indicator cord.

When a moderate speed has been attained, diagrams should be taken simultaneously from the cylinders and carefully examined for defects in valve setting. The adjustments to be made depend, of course, upon the faults revealed, but usually slight adjustments in the lengths of the valve stems will be sufficient. For instance, suppose the top of the high-pressure cylinder is developing more power than the bottom, the card areas may be made nearly equal by shortening the high-pressure valve stem, which will bring cut-off earlier at the top and later at the bottom; the leads will change but little, that at the top decreasing, and that at the bottom increasing. The same principles apply to the low-pressure side, but in general the low-pressure valve will give satisfactory distribution if it was carefully set during erection and the high-pressure valve is properly adjusted.

### Adjusting the Governor

The only remaining adjustments are those pertaining to the governor. As already stated, this engine is regulated by a modified form of the Rites inertia governor, which has been so universally adopted for high-speed engines that a description is unnecessary. It is well, however, to bear in mind a few of its fundamental principles, for governor adjustments call for a knowledge of these principles rather than a blind following of directions for changing certain adjustments because of certain defects.

The governor combines both the centrifugal and inertia effects: the former controlling the speed variations caused by changes of load, while the latter has to do with steadiness. The governor arm tends to maintain its rotative speed due to the inertia of the heavy weights. If the load increases, the engine tends to slow down, that is, the rim of the governor wheel will slow down but the weights tend to move at the same speed as before. The effect of these two movements is that the center of gravity of the arm moves inward, increasing the load and lengthening the cut-off.

If while the load changes slightly the speed is steady, but lower than desired, the tension of the governor spring may be increased, or the spring pin *P* moved outward. If on increase of load, the speed drops more than it should, the spring pin *P* (Fig. 146) may be set nearer the governor arm pivot by moving it along the slot, or the weight at *W* may be reduced, and also the tension in the spring. In short, speed regulation consists primarily in balancing the spring tension against the centrifugal force of the arm. Exact balance at all points in its movement would result in practically uniform speed from no load to full load, but the governor would then lack stability, hence it is better to not quite balance the centrifugal force, so that the speed will drop about 2 per cent. with an increase from no load to full load.

If the governor is unsteady, and requires several long swings of the arm to correct the speed, weight may be added to the long end of the arm (*M*, Fig. 146), or the spring pin *P* may be moved outward in its slot.

These brief remarks regarding the governor are for testing plate adjustments, but it is assumed that the valves are correctly designed, the pins of ample size, and properly lubricated. After long service wear may affect the condition of the parts that were all that could be desired when on the testing plate. When in poor condition, governor adjustments may be slightly different, for a worn valve, scored pin, or insufficient lubrication may be the fault of poor speed regulation.

The instructions given for setting the valves refer to the Sturtevant compound engine having cylinders 10 and 18 ins. in diameter, and a stroke of 10 ins. This type of engine is built in other sizes, as given in the table on page 144. The various sizes of this class of engine vary in dimen-

DETAILS AND MEASUREMENTS OF STURTEVANT COMPOUND ENGINES

| SIZE OF ENGINE | HIGH-PRESSURE VALVE | | | | | | | | | | LOW-PRESSURE VALVE | | | | | | |
|---|---|---|---|---|---|---|---|---|---|---|---|---|---|---|---|---|---|
| | Maximum Valve Travel | Laps | | | | Leads | | Thickness of Valve from Top to Steam Edge | Top of Valve to Top of Chest Valve Set with Lead | Top of Chest to Bottom Edge of Top Port | Maximum Valve Travel | Laps | | | | Leads | |
| | | Steam Top | Steam Bottom | Exhaust Top | Exhaust Bottom | Top | Bottom | | | | | Steam Top | Steam Bottom | Exhaust Top | Exhaust Bottom | Top | Bottom |
| $6\frac{1}{4} - 10\frac{1}{2} \times 6\frac{1}{4}$ | $2\frac{5}{8}$ | $1\frac{1}{16}$ | $1\frac{1}{16}$ | 0 | $\frac{1}{8}$ | $\frac{5}{32}$ | $\frac{5}{32}$ | $1\frac{5}{8}$ | $2\frac{11}{32}$ | $4\frac{1}{8}$ | $2\frac{5}{8}$ | $1\frac{5}{16}$ | $2\frac{9}{32}$ | 0 | $\frac{7}{32}$ | $\frac{1}{16}$ | $\frac{5}{32}$ |
| *7 — 12 × 7 | $2\frac{1}{2}$ | $\frac{7}{8}$ | $\frac{7}{8}$ | .. | .. | .. | .. | ... | ... | ... | $2\frac{1}{2}$ | ... | ... | .. | .. | .. | .. |
| 8 — 14 × 8 | $3\frac{9}{16}$ | $\frac{7}{8}$ | $\frac{7}{8}$ | $\frac{3}{32}$ | $\frac{1}{4}$ | $\frac{3}{16}$ | $\frac{3}{16}$ | $2\frac{5}{32}$ | $2\frac{7}{8}$ | $5\frac{7}{32}$ | $3\frac{3}{8}$ | $1\frac{3}{32}$ | $1\frac{1}{32}$ | 0 | $\frac{1}{4}$ | $\frac{1}{16}$ | $\frac{5}{32}$ |
| 10 — 18 ×10 | $4\frac{5}{8}$ | $1\frac{1}{8}$ | $1\frac{1}{8}$ | $\frac{1}{16}$ | $\frac{1}{4}$ | $\frac{1}{4}$ | $\frac{1}{4}$ | $2\frac{7}{16}$ | $3\frac{1}{4}$ | $5\frac{5}{16}$ | $4\frac{3}{8}$ | $1\frac{1}{2}$ | $1\frac{3}{8}$ | 0 | $\frac{1}{32}$ | $\frac{3}{32}$ | $\frac{1}{4}$ |

* Valves being redesigned.

sions only, therefore the valves are set in the same manner for all, the measurements differing of course. The above table gives further details and important measurements.

## XV

## THE RICE AND SARGENT ENGINE

THIS engine, as shown by the cut given herewith, is of the heavy-duty Corliss type, primarily designed for direct-connected electrical work and for operation at speeds somewhat higher than the ordinary Corliss engine. The motions of all the valve parts are obtained without wrist plates, are

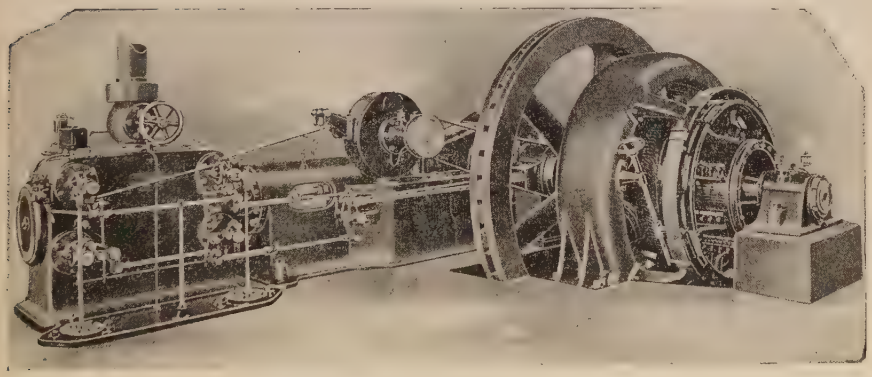

FIG. 149.

made as short as advisable, and all parts made very strong with unusually large wearing surfaces. The illustration (Fig. 149) represents a small, simple engine. The company also builds compound engines of both tandem and cross types and vertical engines of large sizes; the sizes ranging from 150 horse power to 2,000 horse power on single cylinder engines and 250 to 7,500 horse power or larger on compound engines. Engines of 1,000 horse-power rated load are regularly operated at 150 revolutions and smaller engines at suitable slightly higher speeds. Engines of the largest size are run as slow as 75 revolutions.

Illustrations are shown herewith of the inlet and exhaust valve gears. The operation of the inlet valve gear is as follows:

Fig. 150 shows the inlet valve gear for the front end of the cylinder in its extreme left and opening position. The latch *A* on the valve-stem lever *B* is in the position of engagement with the toe *C* on the rocker *D*. The pin *E* connects through the intermediate rockers and rods with the steam eccentric on the engine shaft, and the pin *F* connects to a similar inlet gear at the back end of the cylinder. As the rocker *D* moves to the right, the toe *C* engages the latch *A*, moving the inlet valve to open, and raising the dashpot plunger which is connected to the pin *P*. Cut-off is accomplished by the toe *C* turning downward on its pivot spindle *H* to release the latch *A*. The spindle *H* has a cam lever *I* rigidly attached in

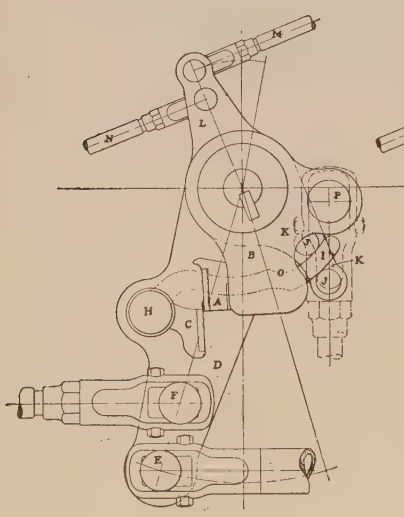

FIG. 150.

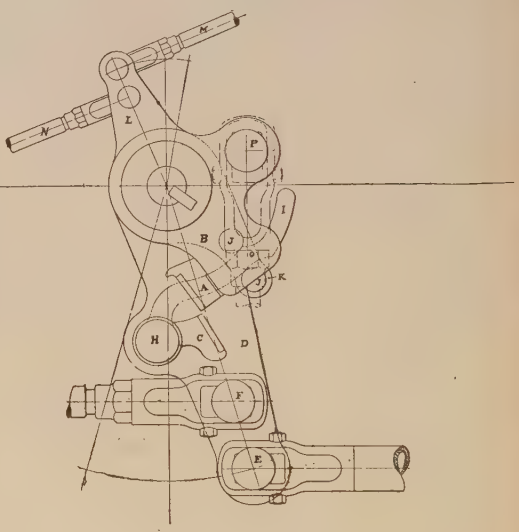

FIG. 151.

the rear, which in turn is carried between two rolls, *J J*. These rolls turn on pins in the cut-off lever *K*, which latter turns freely on the valve-stem journal. The arm *L* above forming part of the same casting as the cut-off lever *K*, is connected to the governor by the rod *M*. This rod is held firmly by the governor and does not move unless there is a change in the speed of the engine. The rod *N* connects to the valve gear at the head end of the cylinder. The latch *A* is released at some point in the opening movement of the rocker *D*, toward the right. This is accomplished when the rise *O* of the cam lever passes between the cam rolls *J J*. It is obvious that the amount of valve opening and the length of cut-off depend on the position of the cut-off lever *K*, as controlled by the governor. The further to the left the lever *K*, the earlier the cut-off.

Fig. 151 shows the rocker *D* at the extreme right of its motion. Release has taken place and the valve is about to be closed by the pull of the dashpot. The valve then closes promptly and the lever *B* turns to the position shown in Fig. 150. The cut-off lever *K* is here shown in the position giving nearly the latest cut-off, which is about three-quarter stroke of the piston. On the return movement of the rocker *D*, the cam rolls *J J* raise the cam lever *I* and the toe *C* to the engaging position. At the latter part of the movement of the rocker *D* to the left, as the toe *C* passes under the latch *A*, the latter is raised by the toe sufficiently to clear the same and the latch then drops by gravity in front of the toe to the engaging position, as shown in Fig. 150.

On the exhaust gear the motion of the eccentric is transmitted through the intermediate rockers and rods to the bell crank shown in the illustration Fig. 152. The motion of the bell crank is transmitted to the exhaust

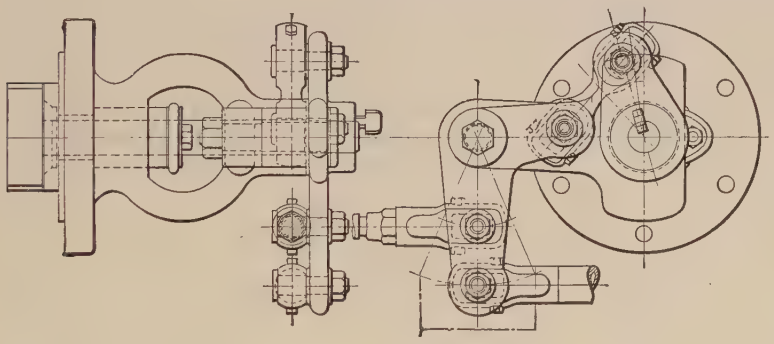

FIG 152.

lever through a link, thus allowing the valve to pause at the end of a stroke. The valves of the engines are set as follows:

Before setting the valves, see that the lengths of all valve-gear rods and clutch rods are so adjusted that all the valve rockers and intermediate rockers are plumb. These are the rockers shown in the illustration of the complete engine herewith, to which the eccentric rods and the valve-gear rods are attached. When these rockers are plumb, rotate the eccentrics on the shaft and adjust the eccentric rod until the travel of the intermediate rockers on each side of the plumb line is equal. Then place the engine on the forward center and make coinciding marks on the crosshead shoe and the slide. Then move the engine backward, so that these lines will be $\frac{1}{4}$-in. to $\frac{5}{16}$-in. apart. This will give from $\frac{1}{16}$-in. to $\frac{1}{8}$-in. valve opening at the time the engine passes the center. Then rotate the steam eccentric on the shaft, so that the valve and port will be line and line and moving

to open the valve. The arrangement of the valves in the cylinder is as shown by Fig. 153.

To set the exhaust valves, move the engine back about $3\frac{1}{2}$ ins. and set the eccentric so that the valve and ports are line and line and moving to close the proper valve. Then turn the engine to the back center and repeat this operation, only turn the engine back more than $3\frac{1}{2}$ ins., and then approach the marks as in the regular operation of the engine, so as to get out all back lash.

This distance of $3\frac{1}{2}$ ins. should be varied through quite wide limits to give more or less compression according to the speed of revolution of

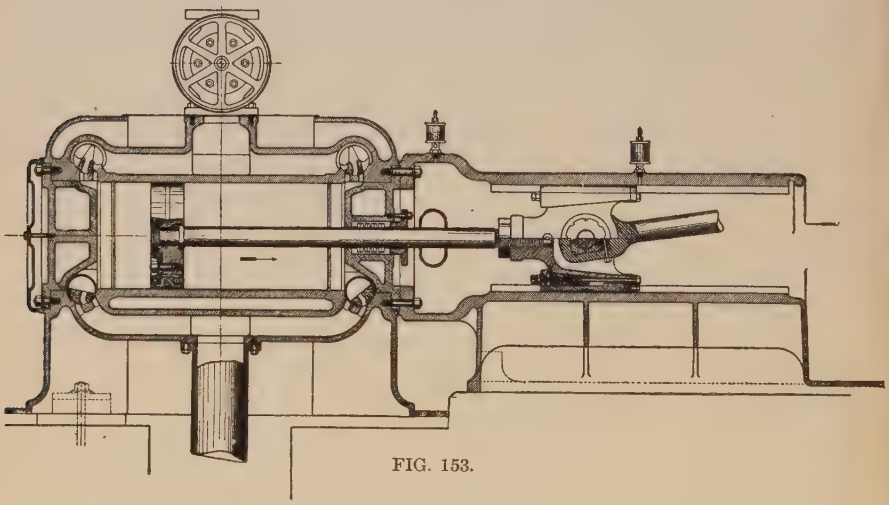

FIG. 153.

the engine and according to the method of operation, whether condensing or noncondensing.

If the marks do not come exactly the same as at the front end, adjust the eccentric rod to make up one half of the difference and move the eccentric so that the lines on the valve and ports again come together. The whole setting should now be repeated.

At all times have the length of the rod connecting the two rocker levers of such length that both levers will be plumb at the same time.

On the low-pressure side the steam valve should be set to open about $\frac{3}{8}$ of an inch from the end of the stroke, and the exhaust valves close from 6 to 8 ins. from the end of the stroke.

On tandem-compound engines, a mark should be made on the front end of the high-pressure sole-plate clamp when the engine is cold; then when the engine is thoroughly heated, measure the amount the high-pressure cylinder has moved due to the heat expansion, and lengthen out the long

clutch rods the same amount. The valve adjustment will then be practically the same as if the valves were set with the engine hot.

The steel plates on the latches and toes should lap by each other when engaged, $\frac{1}{16}$ in. on cylinders up to 22 ins. diameter, $\frac{3}{32}$ in. on cylinders from 24 ins. to and including 30 ins. and $\frac{1}{8}$ in. on cylinders above 30 ins. diameter. The distance the latch and toe plates move by each other before engaging is adjusted by the dashpot rod, and should be kept as small as practicable. On the smaller size cylinders this amount should not be less than $\frac{1}{16}$ in. and should not exceed $\frac{1}{8}$ in. on the largest size.

## Adjusting the Rites Inertia Governor used on Rice and Sargent Engines

The details of this governor are as shown by the cut given herewith (Fig. 154). This illustration shows the governor in the shop set on wooden

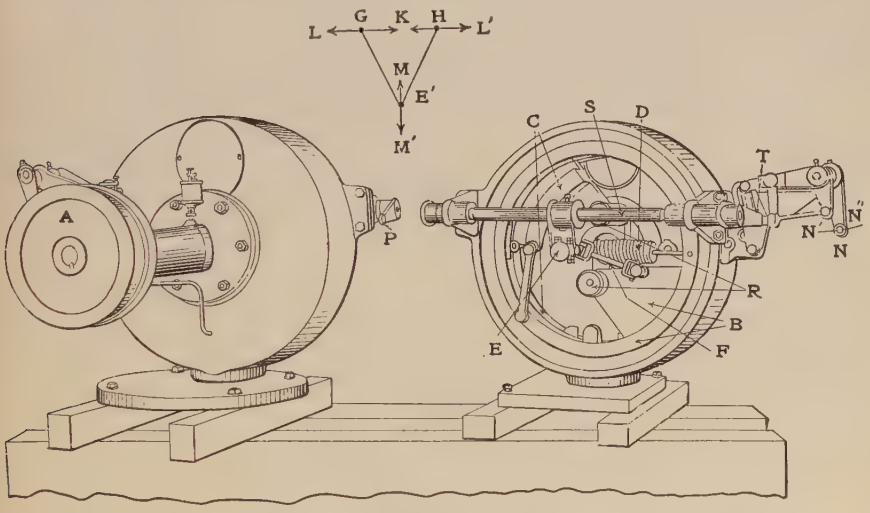


FIG. 154.

blocks merely for the purpose of photographing. Its position on the engine is shown in Fig. 149. The operation of the governor is as follows:

The governor weights are caused to revolve by means of a belt acting on the pulley shown at *A*. The circular weights shown at *B* and *C* are suspended on pivots shown at *R*. These weights, due to the centrifugal force, tend to fly from the center and are held from flying too readily by means of the spring *D*. These weights are connected with the bell crank *E* by means of the arm *F* and the similar arm which is out of sight connecting the weight *C*. The action of the weights on the rocker *E* is as shown by the sketch given above the cut, the points *G* and *H* repre-

senting the connection of the arms $F$ with the weights $B$ and $C$. The points $G$ and $H$ are compelled to move in a straight line, since the revolving weights throw directly from the center. Therefore it is seen that when the points $G$ and $H$ separate, moving toward $L$ and $L'$, the point $E'$, which represents the pivot at the end of the rocker $E$, is compelled to move toward the point $M$, and when the weights, due to a slackening in speed, approach the center and the points $G$ and $H$ approach the point $K$, it is seen that the point $E'$ would move toward point $M'$. This rocker $E$ is rigidly connected to the shaft $S$, and the motion of the weights $B$ and $C$ imparts an oscillating motion to the shaft $S$ which is transmitted by means of the mechanism $T$ to the lever $N$, the end of which has a motion in an arc of a circle toward $N'$ and $N''$. The governor rod connecting with the cam collar, which determines the point of cut-off, is connected at this point $N$. A retarding dashpot to prevent the governor being too sensitive is connected at the point $P$.

All parts of the governor should work freely and all cut-off connections should have an appreciable endwise movement on their pins.

The governor cross shaft must be perfectly free to move. The governor may be made more sensitive by screwing one or both of the plugs out of the spring, and less sensitive by screwing these plugs into the spring. One-half turn of one plug is sufficient for a trial. This operation necessitates removing the spring from the governor and securing it in a vise.

To cause the engine to run faster, increase the tension of the spring by turning the spring on its screws. To cause the engine to run slower, reverse this operation. One turn of the spring will usually make a difference in speed of about one revolution of the engine.

### Adjusting the Cut-off Rods of the Rice and Sargent Engine

In adjusting the cut-off rods on the high-pressure side of a compound engine, or on a simple engine, the cam slot on the governor is so designed that with the governor blocked at the top or the bottom of this slot, the position of the cam collar on the valve bonnet will be the same. Therefore block the governor at either the top or the bottom of this slot and adjust the rod leading to the forward governor rocker so that the latch and toe will just miss connecting. Then adjust the governor rod between the front bonnet and back bonnet so that the back-end latch and toe will just miss. This method of adjustment will give the greatest obtainable range of cut-off and still make certain that no steam will be admitted to the high-pressure cylinder when the governor is clear up or clear down.

To adjust the low-pressure cut-off rods, first equalize the cut-off on the front and back ends by means of the cut-off rod between the front

and back bonnets. Then adjust the cut-off rod leading from the governor cross shaft so as to get the desired receiver pressure.

On condensing compound engines a receiver pressure of 10 to 15 lbs. is desirable, with an initial steam pressure of 100 to 150 lbs. On non-condensing compound engines with the same initial pressure, the receiver pressure should be 36 to 40 lbs.

The low-pressure cut-off should always be so adjusted as to allow the low-pressure steam valves to open slightly, when the governor allows the toe and latch to pass each other on the high-pressure side. This adjustment is made after the proper receiver pressure is obtained, and will prevent racing on light loads and in process of preparing to throw the load on the engine.

## XVI

## REYNOLDS (1890) AND GIRDER FRAME CORLISS ENGINES

The steam valves of these engines admit the steam under the valve edges nearest the center of the cylinder and while the valve is traveling away from the center. In common parlance, they admit the steam "under." The steam edge of the cylinder port is also located nearest the center. The steam edge of the steam port and that of the valve are shown in Fig.

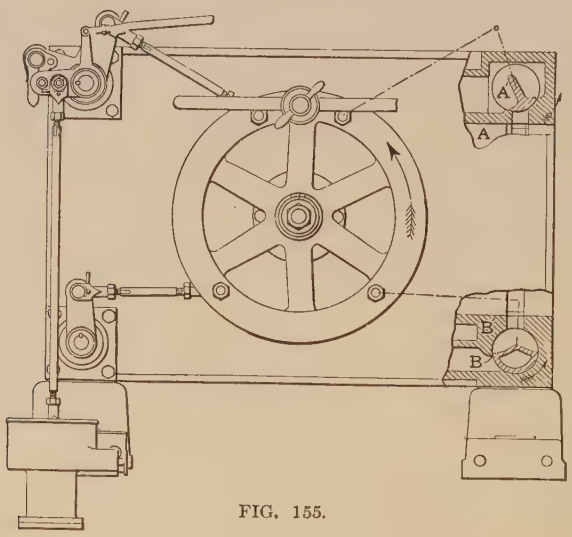


FIG. 155.

155, at $A$ and $A'$. Logically, the steam exhausts over the edges of the exhaust valve and port nearest the cylinder center; these edges are shown at $B$ and $B'$, Fig. 155. In the figures the direction of travel of both valves *when opening* is indicated by arrows.

The direction of travel of the wrist plate when the crank-end steam valve is opening and the crank-end exhaust valve is closing is shown by the arrow on the wrist plate. (At the same time the head-end steam valve has closed and the exhaust valve is open.)

The working edges of the valves and ports are shown by radial lines on the valve end and steam-chest end, when the back bonnets on the side of the cylinder opposite to the wrist-plate side are off. The steam and ex-

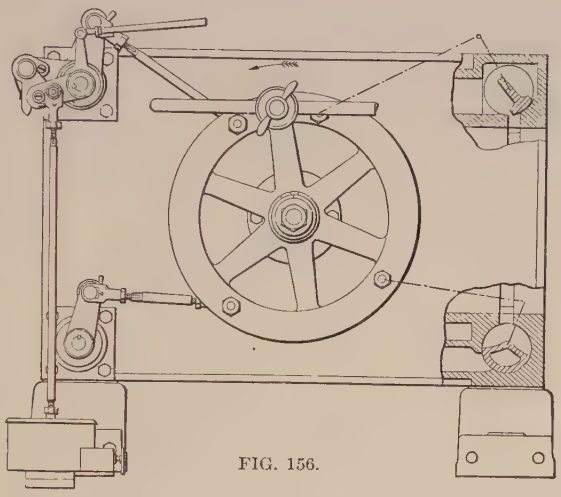

FIG. 156.

haust valves both indicate lap when the lines on the valves are nearer the center of the cylinder than are the lines on the chest. This condition is shown in Fig. 157, which represents the end of one steam valve and chest

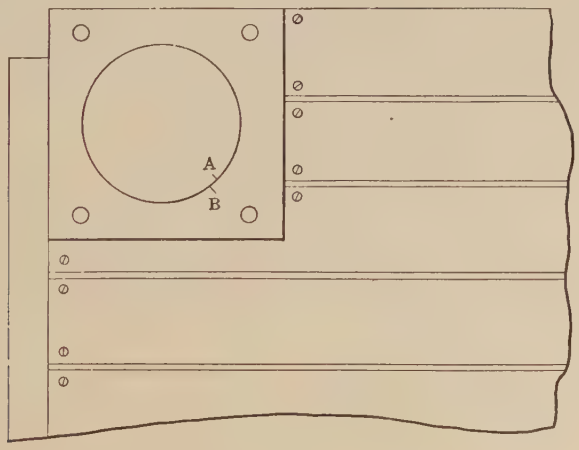


FIG. 157.

with the back bonnet off. The line *A* on the valve overlaps the line *B* on the steam chest toward the center of the cylinder.

Fig. 155 shows the wrist-plate central for adjusting the valve connections. There are three marks on the back of the wrist-plate hub and one mark on the wrist-plate stand, which is bolted to the cylinder, the marks appearing as in Fig. 158. When the lines *2* and *4* come together the wrist plate is central; when *1* and *4* are opposite each other the wrist plate is

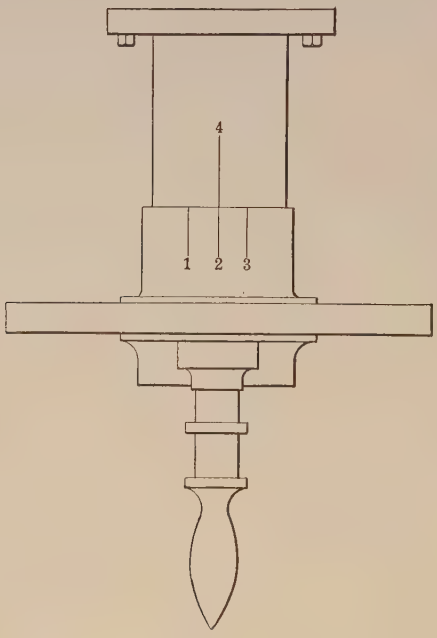


FIG. 158.

on one extreme of its travel, and when *3* and *4* are opposite each other the wrist plate has reached its other extreme.

To set the valves as in Fig. 155; first even up the travel of the rocker arm and wrist plate, according to the instructions for setting Corliss valves, in Chapter V, and then, placing the wrist plate in its central position, proceed to adjust the valve rods so the steam and exhaust valves will have the lap given opposite the cylinder diameter in the accompanying table. Set the engine on the center and move the eccentric until the steam valves have the lead given in the table.

### To Adjust the Length of the Dashpot Rods

Referring to Fig. 159, when rod *H* is down as far it will go, the shoulder *E* on the brass hook should just clear the steel block *F* on the valve arm, as shown, leaving clearance below the block, as at *G*. This

TABLE OF LAPS AND LEAD FOR SETTING VALVES

| Diameter of Cylinder | Lap of Steam Valves | Lap of Exhaust Valves | Lead of Steam Valves |
|---|---|---|---|
| 8 | $\frac{3}{16}$ | $\frac{1}{16}$ | $\frac{1}{32}$ |
| 10 | $\frac{3}{16}$ | $\frac{1}{16}$ | $\frac{1}{32}$ |
| 12 | $\frac{3}{16}$ | $\frac{1}{16}$ | $\frac{1}{32}$ |
| 14 | $\frac{1}{4}$ | $\frac{1}{8}$ | $\frac{1}{32}$ |
| 16 | $\frac{1}{4}$ | $\frac{1}{8}$ | $\frac{1}{32}$ |
| 18 | $\frac{1}{4}$ | $\frac{1}{8}$ | $\frac{1}{32}$ |
| 20 | $\frac{1}{4}$ | $\frac{1}{8}$ | $\frac{1}{32}$ |
| 22 | $\frac{5}{16}$ | $\frac{3}{16}$ | $\frac{3}{64}$ |
| 24 | $\frac{5}{16}$ | $\frac{3}{16}$ | $\frac{3}{64}$ |
| 26 | $\frac{5}{16}$ | $\frac{3}{16}$ | $\frac{3}{64}$ |
| 28 | $\frac{5}{16}$ | $\frac{3}{16}$ | $\frac{3}{64}$ |
| 30 | $\frac{5}{16}$ | $\frac{3}{16}$ | $\frac{3}{64}$ |
| 32 | $\frac{3}{8}$ | $\frac{1}{4}$ | $\frac{1}{16}$ |
| 34 | $\frac{3}{8}$ | $\frac{1}{4}$ | $\frac{1}{16}$ |
| 36 | $\frac{3}{8}$ | $\frac{1}{4}$ | $\frac{1}{16}$ |

adjustment of the rod *H* must be made when the wrist plate is at its extreme throw, as shown by a mark on the back hub.

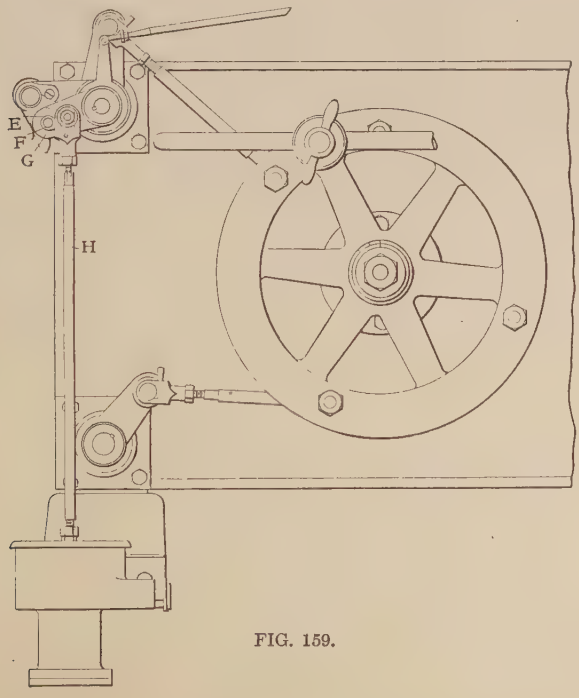


FIG. 159.

## Heavy Duty and "Reliance" Types

Figs. 160 and 161 are views of the cylinders on these types of engine which are built by the same company. In design these engines differ from

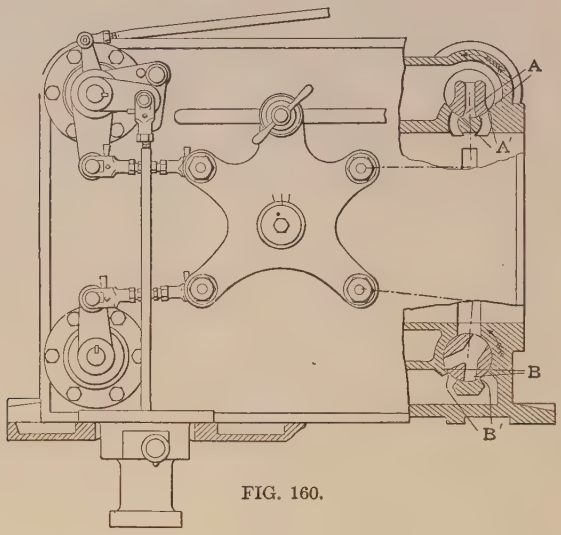


FIG. 160.

those illustrated in Figs. 155 and 156 in having less heavy wrist plates to suit higher engine speeds, and in being equipped with double-ported steam and exhaust valves.

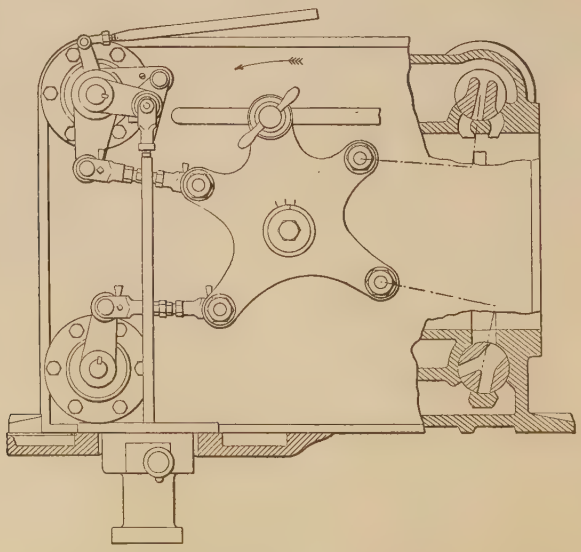

FIG. 161. — RIGHT-HAND SIDE.

Fig. 160 shows the wrist plate in its central position, with the valves lapped. The steam is admitted over and through the valves, the steam edges of the steam valves being shown at $A$ and the working edges of the two ports—i.e., the edges away from the center of the cylinder at $A'$. The exhaust edges of the exhaust valves and ports are those nearest the cylinder centers, and are designated respectively $B$ and $B'$. The arrows show the direction of travel of the valves *when opening.*

When the back bonnets of these valve chests are removed, two lines will be found on the valves and two on the chests, marking the locations of the two port edges on each. The steam valves are thereby known to be lapped when the lines on the valves are farther from the center of the cylinder than the lines on the chest, and the exhaust valves lap when the

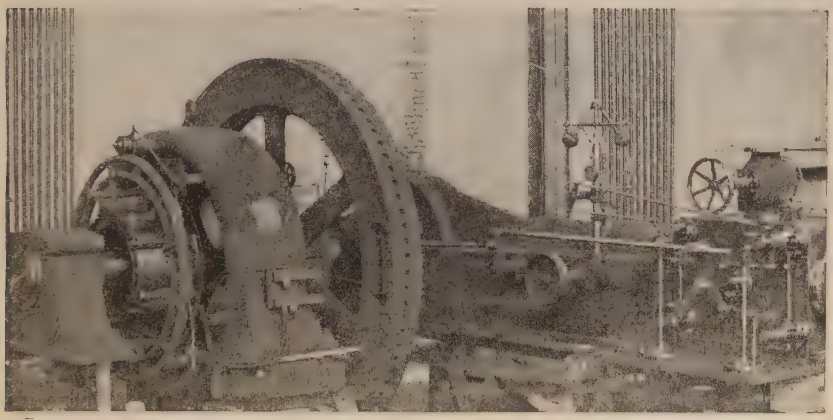

FIG. 162. — LEFT-HAND SIDE.

lines on the valves are nearer the center of the cylinder than the lines on the chest.

To set these valves, proceed as in Figs. 155 and 156, with the exception of providing the lap for the steam valves in the manner just stated. Allow the amounts of lap and lead given in the table already referred to, which is applicable to both types of valve.

Fig. 161 shows the position of the wrist plate when the engine is on the center and the eccentric is advanced to give the steam valves proper lead. The adjustment of the dashpot rods is obtained in the manner described in the preceding section of this chapter.

Fig. 162 shows the valve-gear side of one of these engines, by which it will be seen that the rocker-arm motion is direct; this implies that the eccentric should be advanced ahead of the crank in the direction of rotation.

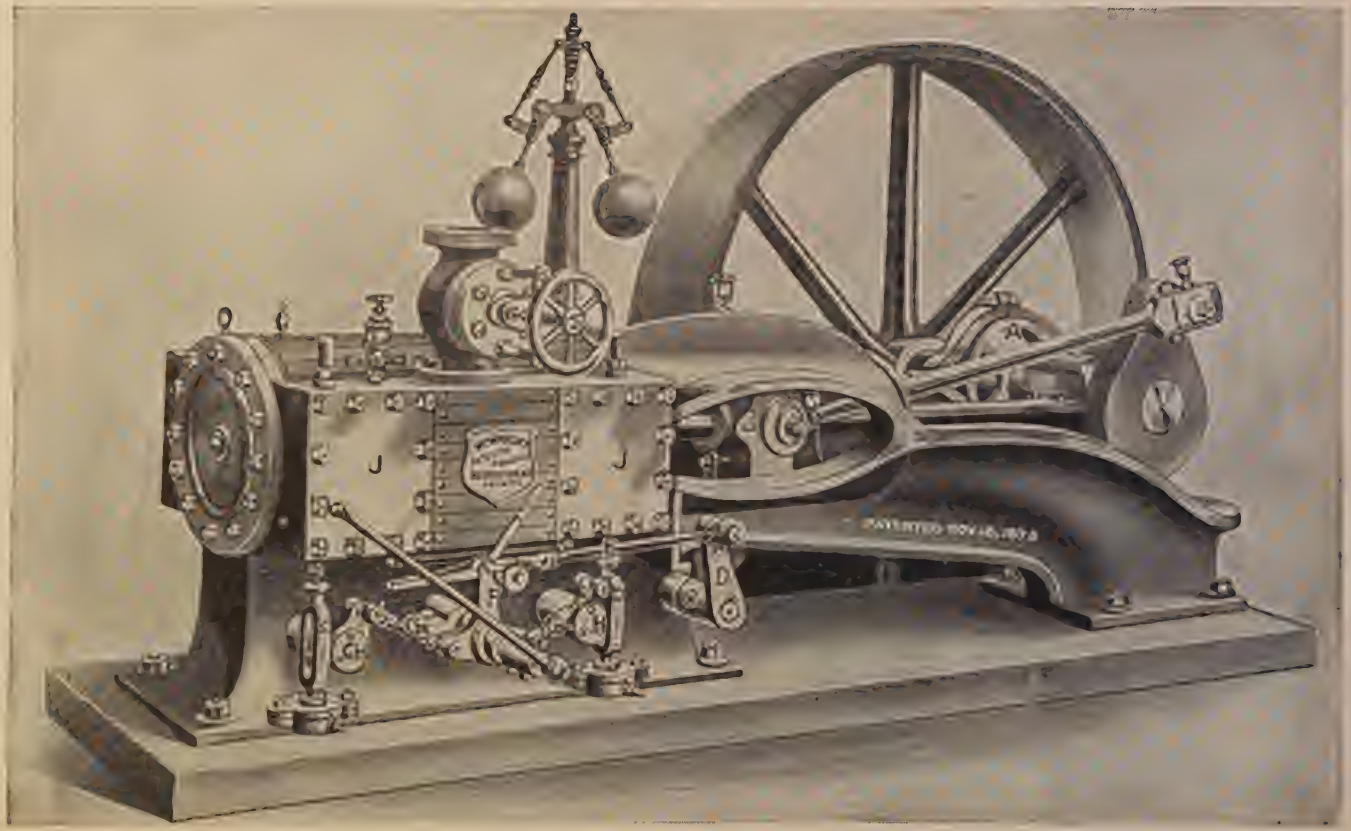

FIG. 163.—STEAM SIDE OF WRIGHT AUTOMATIC CUT-OFF ENGINE.

## XVII

## THE WRIGHT STEAM ENGINE

Wright engines were designed and built by the late William Wright and many of them are still in use throughout the country. During the many years of his activity in the engine field, Mr. Wright designed a number of different types of valve and valve motion for his steam engines. In the rotary-valve engines there were several modifications in the driving mechanism and of the flat or gridiron valves there were several different shapes of valve and port, but in the latter case the driving mechanisms were all practically the same in detail and principle. As there are a large number of Wright engines in daily operation, an explanation of the setting of the gridiron valve should prove of general interest.

Figs. 163 and 164 give views of the steam and exhaust sides, respectively, of a Wright automatic cut-off engine with four gridiron valves direct-driven from one eccentric. In both these figures the eccentric is indicated by *A*, and the eccentric-rod is shown at *B*, Fig. 164. The rock-shaft *D D'* extends under the engine frame from side to side, and on each end of the shaft are shown the rocker arms. In Fig. 163, *E* represents the hook-rod; *F*, the steam wrist plate; *G G*, the steam valve rods; *H H*, the steam valve cranks; *I I*, the steam valve stems and yokes, and *J J* are the steam chest covers. The same parts relating to the exhaust are indicated by the same letters primed.

### Valves and Valve Movement

Regulation is effected by a pendulum governor, which is shown in the two illustrations just referred to. When the governor is in operation, the balls revolve around the central axis, and as they rise, lift the vertical rod *a*, the lower end of which is shown at *b*, Fig. 164, where it is attached to the arm *c* which actuates the rock shaft *d*. To this shaft are attached the arms *e e*, which draw the splined spindle through the hollow rock shaft.

Both the steam and exhaust valves work vertically and are actuated by valve stems extending downward through stuffing boxes in the bottoms of the chests. The steam and exhaust wrist plates are keyed to one shaft, which extends under the cylinder from one side to the other, so that they operate at the same time, when motion is imparted by the hook rod *E*.

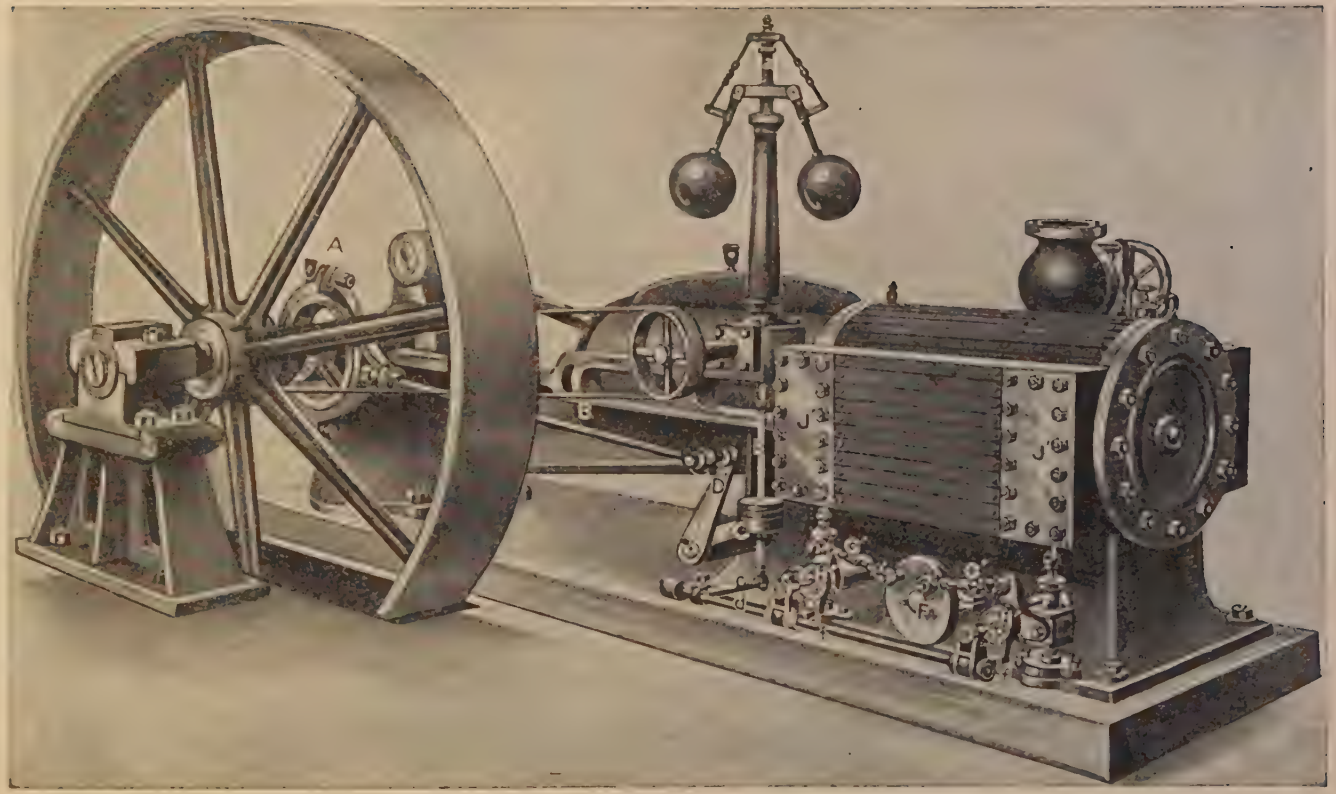


FIG. 164. — EXHAUST SIDE OF WRIGHT AUTOMATIC CUT-OFF ENGINE.

The two shafts which carry the valve cranks are hollow and stationary, each having one steam and one exhaust crank on their respective ends. The main steam valve stems are fastened into the yokes with set screws, and on their lower ends the yokes are provided with dash pots, which also act as guides. The yokes are operated by steel slides which are fitted into the hollow valve crank and act on the toes held in the yoke. In the exhaust valve yokes are provided sliding blocks to which the valve cranks are secured by a pin, the block allowing the pin center to change its position horizontally as it moves vertically.

Of the four gridiron valves with which the Wright engines are provided, two steam and two exhaust valves, one of each is placed on one side of the cylinder and a similar pair on the opposite side. The steam valves are V-shaped and partly balanced, the valve seats being separate and bolted to the cylinders. In Fig. 165 the steam valve as shown at *a a* and *b b* indicates the seat over which the valve rides, permitting the steam to pass from the chest through the valve and seat into the cylinder. The exhaust valves are shown at *c c*, Fig. 165, and the seat at *d* with a plate *e e* to hold the valve against the seat.

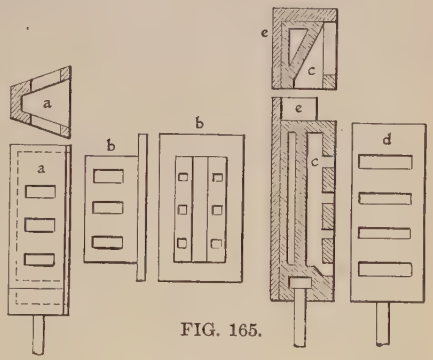

FIG. 165.

A study of Fig. 166 will give an idea of the arrangement of the valves in the cylinder. In the plan one end of the cylinder is in cross section, showing the steam and exhaust valves for that end in their relative positions. The elevation shows the steam valve chest with the valve in position, the small letters having the same significance as in Fig. 165. In Fig. 166 it will be seen that *A* is the steam passage to the valves and *B* the exhaust passage away from the cylinder, but to understand more fully the arrangement of the mechanism for driving the valves, reference should be made to Fig. 167, in which *A* is the elevation of the steam wrist plate and *B* a plan view. At *F* the wrist plate is in its central position, with the cranks *II II* and the yokes *I I* in the same relative positions. On one end the yoke is shown in section and the manner in which the steel slide *a* engages the steel toe *b* in the yoke is also indicated.

When the wrist plate is in the position indicated in Fig. 167, the other valve-rod pins are in the positions shown, and when the wrist pin is at *c* at one extreme of its throw, the other valve-rod pins are at $c^1$, $c^2$, $c^3$ and $c^4$, respectively. By the time the wrist pin has reached its other extreme of travel at *d*, the other pins are at $d^1$, $d^2$, $d^3$ and $d^4$. In the plan *B*, Fig. 167, is shown the rock shafts *e e* with the steam valve crank *H* in place on only

one of the shafts. The splined spindles *f f* pass through the hollow rock shafts and valve cranks as shown, and on one end is a nut *g* which can be adjusted to lengthen or shorten the spindles. At *h* is shown the key which is set diagonally across the end of the spindle and engages a key-way in the plate *a*. A sectional elevation through the same spindle and

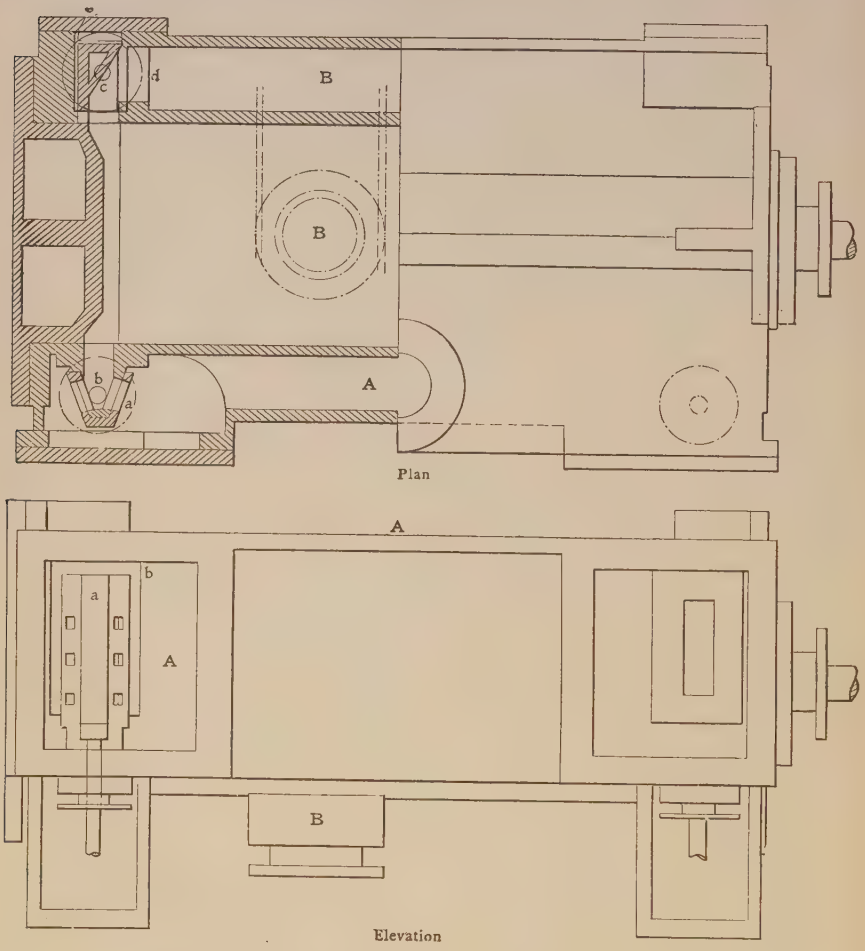


FIG. 166.

shaft is shown at *C*, and at *i* is a bracket which helps support the rock shaft *k*.

Fig. 168 illustrates the exhaust wrist plate *F'*, which is on the same shaft, only at the end opposite to that occupied by the steam wrist plate. It will be noted that the valve-rod pins in the wrist plate are set above the center of the plate, while those in the steam wrist plate are on the same

line when set central. As seen in Fig. 168, the valve crank $H'$ is fastened to the valve yoke $I'$ by a pin in the sliding block $a$.

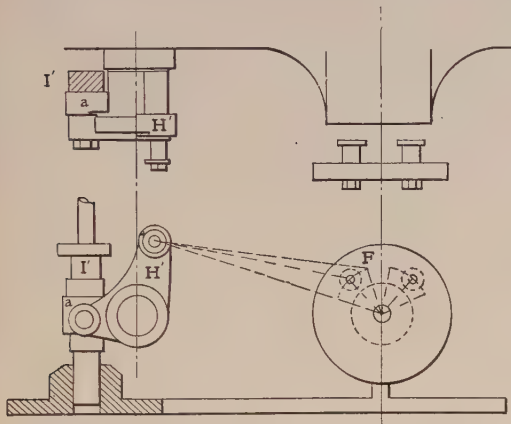


FIG. 168.

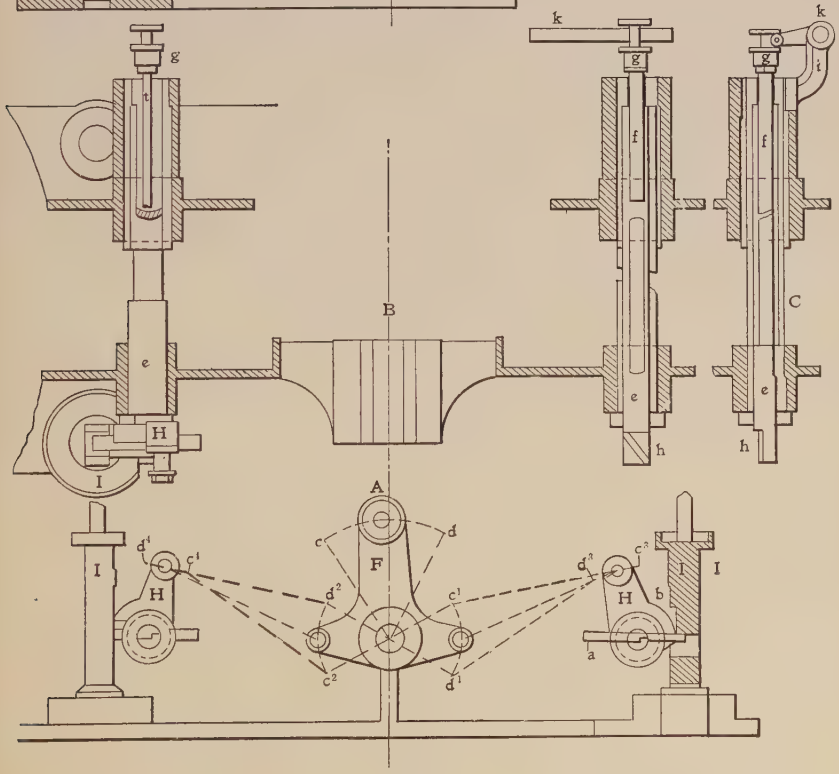


FIG. 167.

Both the steam and exhaust valves are lapped when they are down at the lower end of their travel, with the plunger in the dash pot seated.

When traveling up the valves open, and close in coming down, but to get a complete understanding of the movement of each valve, reference should be made to Figs. 169–172, which have uniform reference letters. The valve is shown from one side, but this must not be mistaken for the true relative position of the valve to the valve gear. One steam valve is shown only.

In Fig. 169 * the wrist plate $F$, valve crank $H$, yoke $I$ and valve $a$ are in the position at which the valve is lapped, and the wrist plate and eccentric are on the center of their travels. The center line $A$ $A$ is horizontal through the wrist plate and valve-crank rockers, $B$ $B$ representing the center of the wrist plate and $C$ $C$ the center line of the valve-crank shaft. The

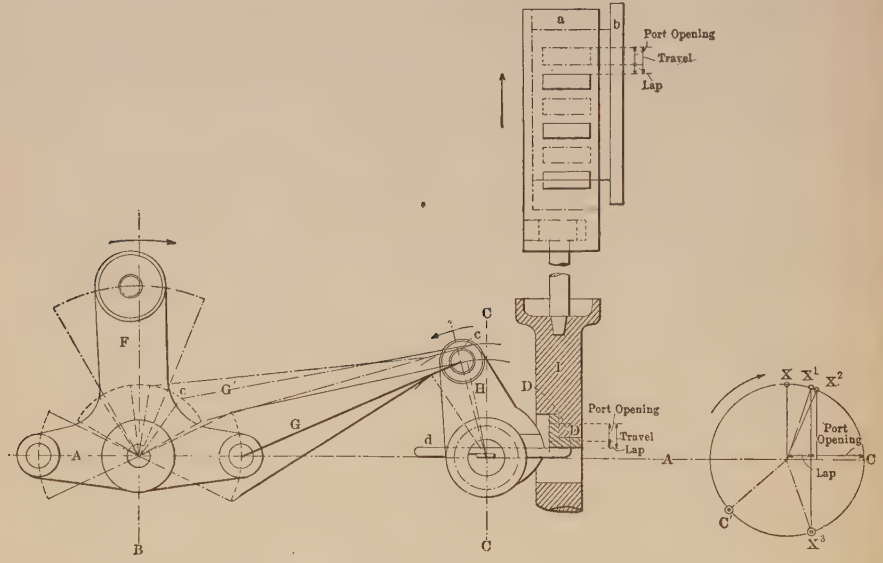


FIG. 169.

dotted line $D$ $D$ shows the arc in which the end of the plate $d$ travels when the valve admits steam during the full stroke, and to the right of Fig. 169 is the eccentric circle in which $X$, $X^1$, $X^2$ and $X^3$ are separate eccentric positions, and $C$ and $C'$ are two separate positions for the crank. The arrows denote the directions of travel of each part at this central position of the eccentric and wrist plate.

Bearing in mind that the wrist plate on the opposite side is operating the exhaust valve, it will be noted that when the steam wrist plate and valve crank are in the position shown, connected by the rod along the line $G$, the wrist-plate pin and valve-crank pins for the exhaust on the

* In Figs. 169–172 the plate at the bottom of the valve yoke I is not shown as a swinging plate, on account of the small scale of the drawing. It is correctly given on page 169.

opposite end are at $c$ $c$ connected along the dotted line $G'$. When the wrist plate and valve crank are in the position shown, with the valve lapped and the crank at its center $C$ on the eccentric circle, the eccentric will be at $X$. Since the valve opens while traveling up, all the parts must move in the direction denoted by the arrows. To overcome the lap, the eccentric would be moved up to $X^1$, and then to give lead the eccentric must be still further advanced to $X^2$, with the crank still at $C$. This gives the angle at which the eccentric should follow the crank, and if continued together in their travel to the point of cut-off, with the plate $d$ at its maximum cut-off position, the crank and eccentric would be at

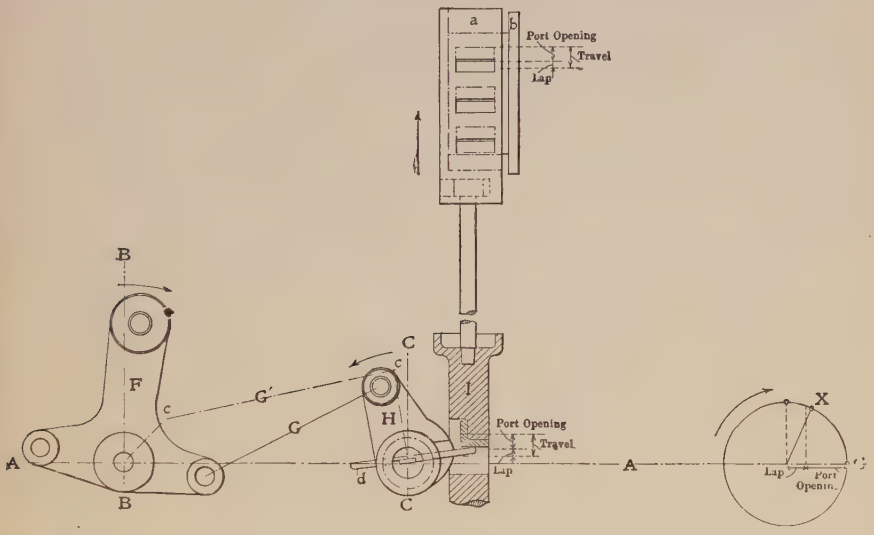


FIG. 170.

$C^2$ and $X^3$, respectively, or the crank would have reached 90 per cent. of its stroke.

It will be noted that the movement of the eccentric is enough to give a travel twice the width of the port and lap of the valve, but that the valves themselves travel only far enough to overcome the lap and port opening. The full lines show the valve port and the dotted lines the position of the port in the valve seat. The dotted lines to the side give the relative positions of the valve and port in port opening and lap, and the dotted lines to the side of the valve yoke $I$ show the positions to which the plate $d$ must lift the yoke to overcome lap and give full opening. The sum of the two is the valve travel.

Bearing in mind that the eccentric is at $X$, with the wrist plate, valve crank and valve in the positions shown, we may advance one step in the movement. In Fig. 170 the position of the wrist plate, valve crank and

valve are shown when the eccentric is advanced to the point $X$ on the travel to give lead to the valve with the crank on its center $C$. The crank

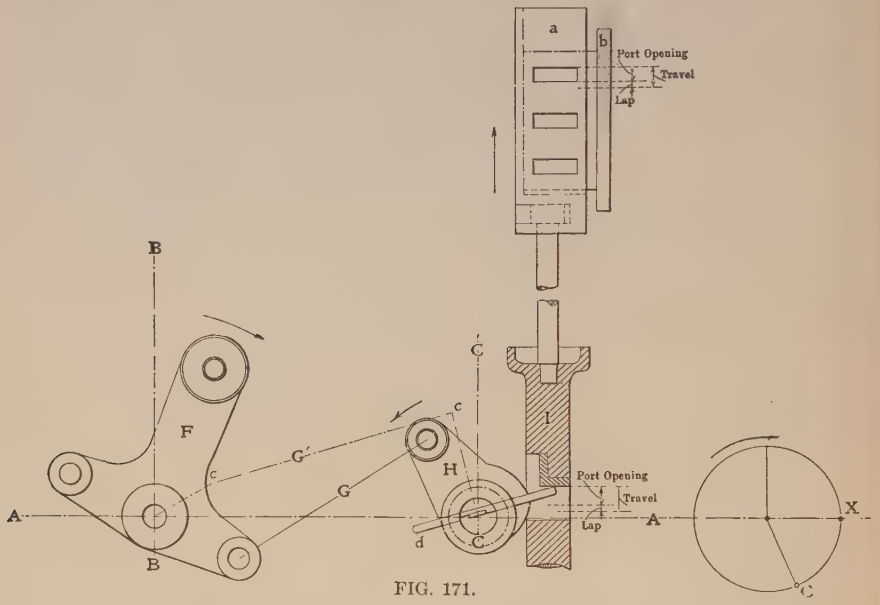


FIG. 171.

and eccentric will now travel together. The relative positions of the exhaust pins are shown at $c$ $c$.

Fig. 171 shows the valve fully opened, having reached the full height

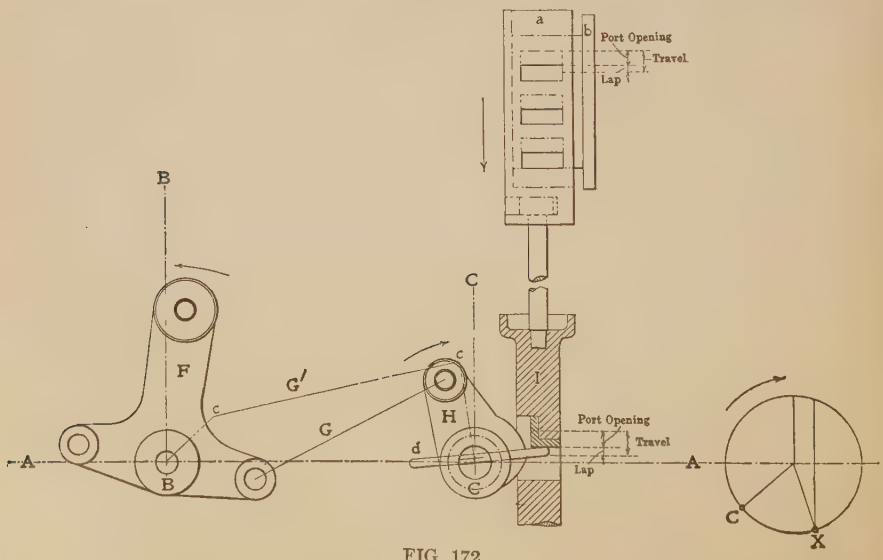


FIG. 172.

of its travel. The eccentric and wrist plate are also at the extremes of their travels, and as the plate *d* is so far extended under the valve yoke that it will not disengage, the valve will not close until the crank and eccentric have so far advanced in their travels as to allow the valve to be lowered far enough to effect cut-off, which is shown in Fig. 172. In this figure it will be noted that the direction of travel in the wrist plate, valve crank and valve have been changed, and cut-off has been accomplished.

As shown in Fig. 167, the governor acts on the steam valves and effects an early or late cut-off through the medium of a splined rod running through the valve-crank shafts; when the rod is drawn through the hollow valve crank, it either causes the plate not to pick up the valve yoke at all, or allows it to carry full stroke. A study of Figs. 174, 175, and 176 will fully explain this action. In these figures *A A* is the center line of plate *d* and valve yoke *I*. The end of the rod is shown at *S*. The bottom drawings are plans and those at the top are elevation views.

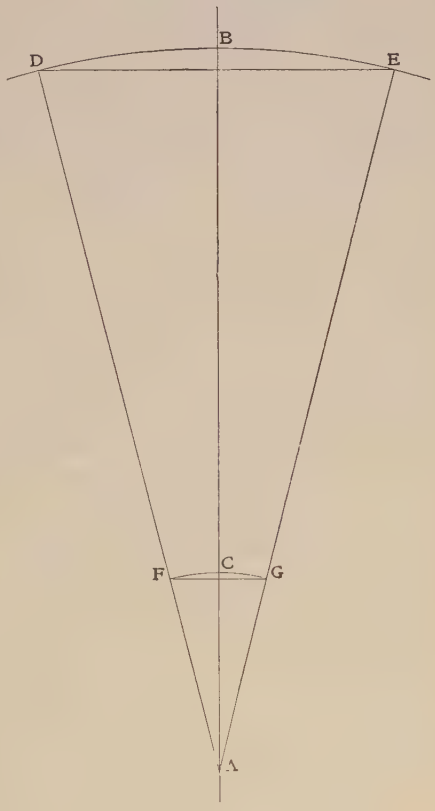


FIG. 173.

In Fig. 174 it will be noted that the splined end of the rod is extended through as far as it will go, thus making the plate *d* extend through the valve yoke to its position for maximum throw. In the elevation the line *D D* shows the arc through which the end of this plate will travel while operating the valves. When the conditions are as shown in Fig. 173, the governor should be at rest or at its lowest point of operation. The rod *S* will then be ready to travel in the direction of the arrow when the governor takes hold. When the valve gear is in the position shown in Figs. 169, 170, 171, and 172 the rod *S* and plate *d* are as shown in Fig. 174.

With conditions as in Fig. 174, the valve is given its full maximum travel, but from that point, as the governor begins to pull the rod *S* in the direction of the arrows, the plate *d* travels in the arc of circles which grow smaller and smaller until the position shown in Fig. 175 is reached.

Here it is shown that the rod *S* has been drawn out to half the distance of the length of the splined end, and as a consequence the plate *d* has been drawn back until the arc *D D* through which that end travels has grown smaller and does not lift the valve so far. The difference in the distance to which the plate now raises the valve, and the distance required for full port opening is shown at *f* and *g*, the latter reference letter in this case equaling the full valve travel. The eccentric, always moving the same amount, throws the plate *d* along the line *D D* enough farther to allow it to disengage itself from the yoke *I*, and the latter in dropping causes the valve to cut off. This event occurs when the piston has traveled about one fifth of its stroke, with the rod and plate in the positions shown in Fig 175.

When the governor weights have reached their maximum position and the engine its normal speed, the splined rod is drawn out still farther until the plate *d*, Fig. 176, will not engage or pick up the valve at all. At this point, when no steam is admitted to the cylinder the minimum valve travel has been reached.

## Setting the Valves

It will be noted that the valve stems set down in the valve yokes on a shoulder and are secured in place by a set screw. This does not allow of easy adjustment of the length of the valve stem or valve lap, and owing to the fact that the valve stems are not easily adjustable, more care must be taken in each step toward setting the valves.

First, place the wrist plate in its central position, as shown in Figs. 167 or 169, and note that the hook pin at the top of the steam wrist plate is not on the vertical center line of the plate, but is off center a few degrees in the direction of the cylinder head or away from the engine shaft. The two steam valve-rod pins on the wrist plate are on the same center line as the wrist-plate center, and when these pins are level and on an exact line with the wrist plate and valve-crank centers, the wrist plate is on the center of its travel. It is a good plan to clamp the wrist plate into central position, while doing the first part of the valve setting, by slacking off on the washer on the end of the stud, placing paper underneath and clamping down on that. If the wrist plate is keyed on the shaft, it can be held in place with a thin wedge driven between the boss of the wrist plate and the cap of the bearing next to it.

Then adjust the length of the valve rods so that the plate *d* in the valve crank *H* is horizontal, as in Fig. 169. If there is no adjustment in the length of the valve rods, then note whether or not the valve cranks are in the required position when the wrist plate is central. In all probability they will be, but, if not, the valve rods must be changed to the

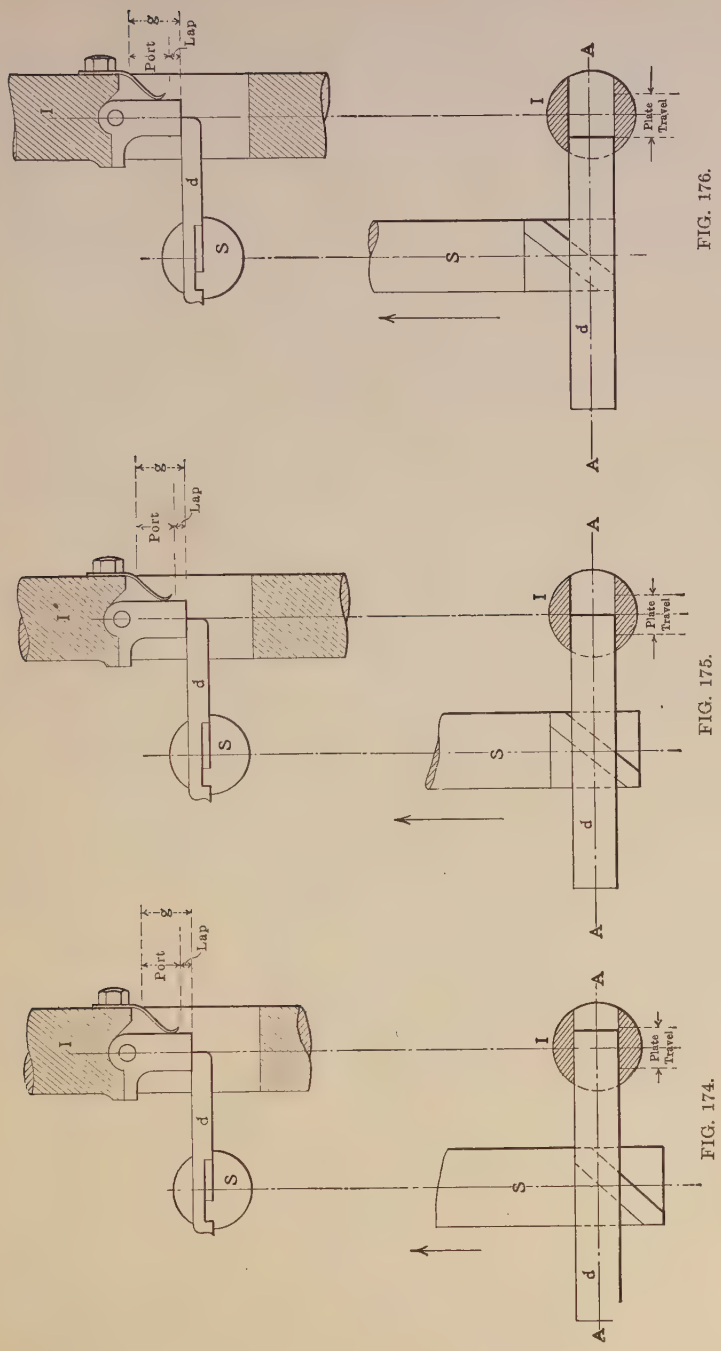


FIG. 176.

FIG. 175.

FIG. 174.

proper length, even if they have to be taken to a machine shop for the purpose. With the governor in its lowest position, adjust the length of the rod *S* so that it is at its outer extreme position, as in Fig. 174, with the plate *d* as shown here and in Figs. 169, 170, 171 and 172. Now hook up the eccentric rod to the wrist plate and free the latter so that it will work and roll the eccentric slowly around the shaft in the direction it is to run. Carefully note the length of travel of each of the valves and see that when they are at the top extreme of their travel that the ports are open no more than in Fig. 171. If both the valves have the same travel and should pass over the edge of the port or farther than necessary to give a full port opening, the plate *d* may be extended too far, and as a remedy the rod *S* should be shortened so that the valve can be raised just far enough to give the full port opening. If the two valves travel unevenly they must be adjusted to travel alike, and separate adjustment can, of course, be made to each. If the valves do not travel far enough to give a full port opening with the adjustment of plate *d* as in Fig. 173, then something must be done to lengthen the valve stems.

After the steam valves have been adjusted the next thing to do is to set the exhaust valves so that they will travel just far enough to give a full port opening. When turning the eccentric around with the wrist plate hooked up, a mark can be placed on the wrist plate and another mark opposite it, at each extreme of the travel, on the hub, adjacent bearing cap or washer, as the case may be. With dividers, the distance between these points can be bisected and a mark made to center the wrist plate. If, when the mark on the wrist plate is brought to this center mark, it does not appear central, as in Fig. 169, then the length of the eccentric rod is wrong and must be proven. The best way to do this would be to make a new set of marks, first placing the wrist plate central, as in Fig. 169. Then make a central mark on both wrist plate and adjacent cap and lay out the two extreme points as follows:

In Fig. 173 let *A B* be the distance from the center of the wrist-plate hub to the center of the hook pin, *A C* the distance from the wrist-plate hub center to the surface of the hub or washer where the marks are to be, *D E* the travel of the hook pin and *F G* the distance apart the extreme positions are to be.

For example, let *A B* = 10 ins., *A C* = 3 ins., *D E* = 5 ins., and *F G* = ? Then

$$10 : 3 :: 5 : ?$$
$$(3 \times 5) \div 10 = 1.5 \text{ ins.}$$

In this case the distance between the extreme points would be $1\frac{1}{2}$ ins., and taking a pair of dividers and setting them at $\frac{3}{4}$ in., a mark could

be scribed on each side of the center line with which the center line on the hub should coincide at each extreme of the travel. Turn the eccentric around again and if the center mark on the hub comes short of one mark and over the other, one of the rods is too long or too short between the eccentric and the wrist plate.

Note whether or not the rocker arm travels equally on each side of the center line, which should be exactly vertical when the eccentric is at half stroke. If the rocker arm does not travel equally on each side of the center line, as for illustration from *D* to *B* and *B* to *E* in Fig. 176, the eccentric rod is too long or too short and must be adjusted. If the travel of the rocker arm is correct and still the wrist plate does not travel equally to its extreme positions, the hook rod needs adjustment.

Having equalized the travel of the wrist plate and valves, proceed to set the valves for running. Place the engine on one center and pull the eccentric around until there is lead on the steam valve for that end, and then make the eccentric fast to the shaft. Next pull the engine around and observe that the exhaust valves release at from 90 to 95 per cent. of the stroke and that the steam valves cut off at from 80 to 90 per cent. of the stroke for the maximum. The exhaust valves should close for compression at from 95 to 97 per cent. of the stroke. Make the lead of the steam valves nearly equal with a trifle more on the crank end.

After the valves are set, block up the governor to its highest point, and while pulling the engine around one complete revolution, see that the steam valves do not pick up at all. To reverse the engine, reverse the eccentric. If, when the indicator is applied, it is found that earlier valve action is desired, it is best to set the eccentric ahead, or back if later action is desired. To get an earlier steam cut-off, the change can be made on the rod *S*, Figs. 174, 175 and 176, but if earlier cut-off is secured in this way, there will be less lead. To obtain a later cut-off in this way will give more lead.

## XVIII

## THE REYNOLDS LONG-RANGE CUT-OFF

To operating engineers in general the Reynolds long-range cut-off as manufactured by the Allis-Chalmers Co. is not very well known. On the surface there appears to be nothing out of the ordinary in the valve gear that would distinguish a Reynolds from any other Corliss engine, but upon closer inspection some essential features will be found so radically different that they will cause the uninitiated considerable trouble until the movement is understood, after which the valve gear is simplicity itself. The long-range cut-off is designed to give a maximum cut-off for power, and the essential feature of the steam valves is that they have a negative lap or opening when in mid position, the cut-off being made entirely by the governor through the knock-off cam.

In the first engine of this design built by Mr. Reynolds for the World's Fair at Chicago, an auxiliary eccentric operated levers on the governor in such a manner as to cause the knock-off block to follow the hook until cut-off occurred, but in all details the valve motion is apparently the same as on other engines. To come to a full understanding of the peculiar features in the design and operation, a careful study of the complete movement during a revolution of the crank is necessary.

Fig. 177 is a view of the valve-gear side of this type of engine. The eccentrics are in the case $A$, the steam eccentric rod is indicated by $B$, and the exhaust by $C$, while the steam and exhaust rods are respectively at $D$ and $E$. It will be noted that the motions from the eccentrics to the wrist plates are direct. The steam and exhaust wrist plates, valve rods, etc., can be easily traced from Fig. 177.

To obtain the first impression of how the interior of the valves look, refer to Fig. 178, in which the steam and exhaust valves on one end of the cylinder are shown with the valve gear removed and the valves and ports in cross section, while on the other end the valve cranks have been left in place and show their relative position to the valves at the opposite end. The steam and exhaust wrist plates are shown at $A$ and $B$, respectively, and above $A$ is shown the travel circle $C$ of the steam eccentric; below is the exhaust circle $D$. In these circles the crank position is at $c$, and $e$ is the eccentric position. The steam-valve crank is indicated by

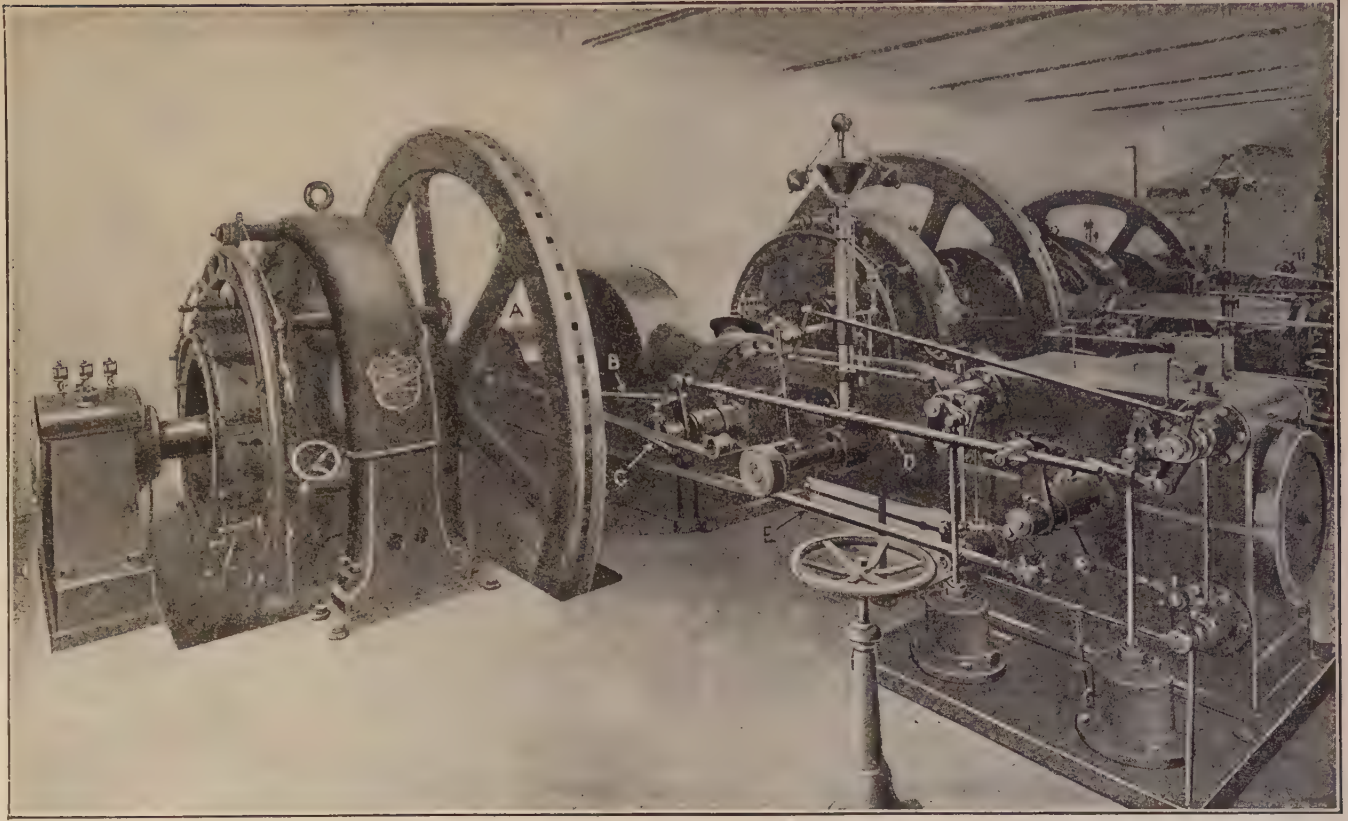


FIG. 177.

$E$, the exhaust-valve crank by $F$; $G$ is the bell crank and $H$ the knock-off cam. On the other end of the cylinder where the valves and ports are in cross section, the dotted lines $E'$, $F'$, $G'$ and $H'$ denote the center lines of the same parts on that end, and the arcs at the ends of these lines show the respective positions of the pin centers. From each end of these

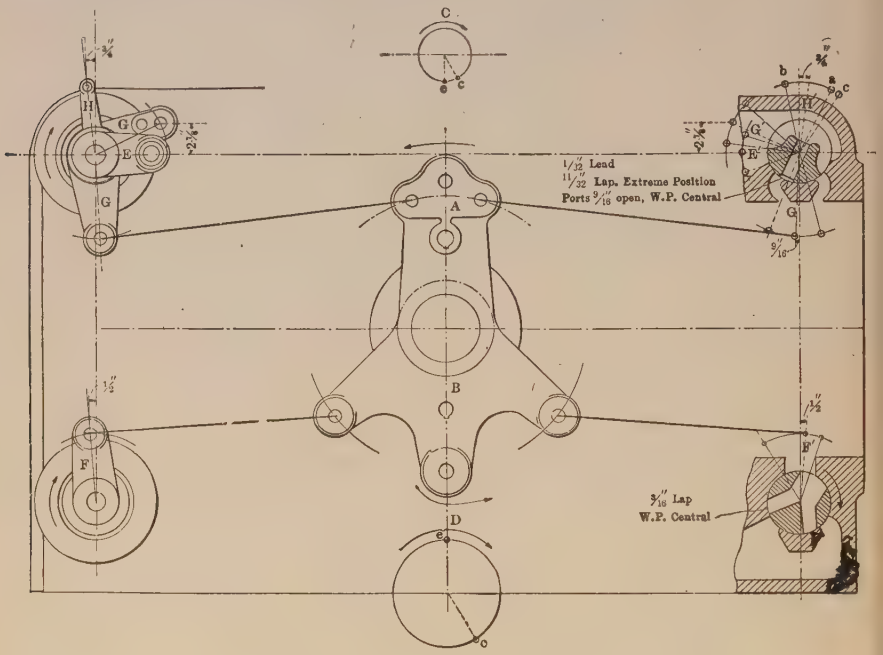


FIG. 178.

arcs the center lines show the positions of the pins when they reach their respective extremes of travel.

## Steam Valves Open at Both Ends When Hooked Up

In Fig. 178 the wrist plates and all connected parts are shown in their central positions, at which the exhaust valves are lapped, as is usual in practice, but the steam valves are open on both ends when they are hooked up. If hooked up and not released the steam valves would be open from the beginning of one stroke up to 75 per cent. of the return stroke, but when the knock-off cam-pin center is at $a$, the cut-off will be carried out to about seven eighths or eleven twelfths of the stroke, and the cut-off will occur just before the steam valve on the opposite end picks up for lead. When the knock-off cams are in the position represented by the lines $H$ and $H'$, Fig. 178, the cut-off will occur at about three eighths

of the stroke, and when the knock-off pin center is at *b* the valves will remain lapped, being dropped before they can open. If the regulator is allowed to drop down so the knock-off cam pin will reach the point *c*, the valves will not pick up and will remain lapped. This peculiarity must be thoroughly fixed in mind.

When an ordinary valve is at the center of its travel, it is lapped on the steam edges and full open to the port when at the extreme of its travel in one direction; at the other extreme of travel it is closed. With the engine under discussion the steam valves are lapped at the extreme

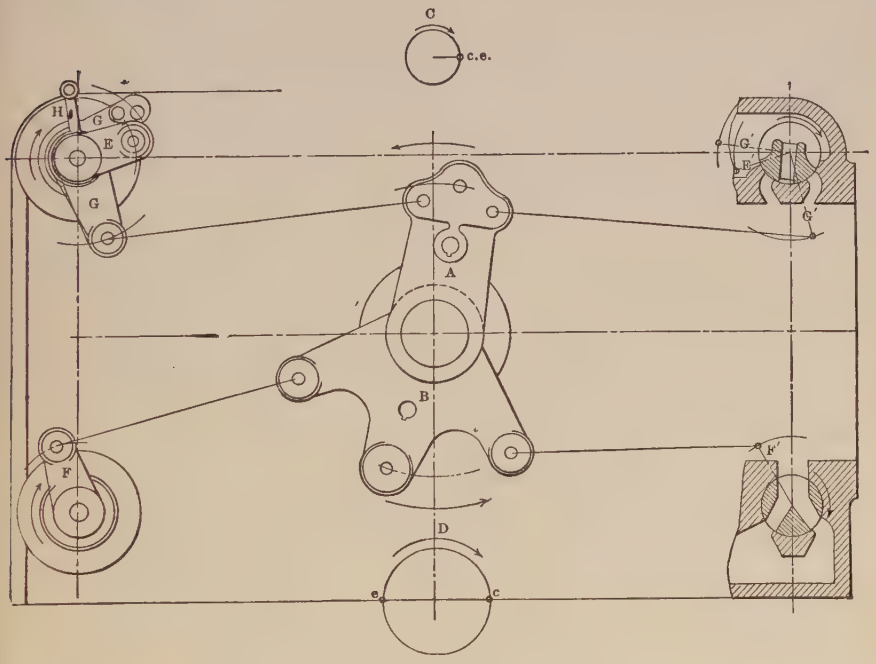


FIG. 179.

throw of the eccentric in one direction, and full open at the other extreme, having minus lap when at the center of travel.

When the steam valve is lapped the proper amount, the dashpot plunger is down at the bottom of its travel, and the cranks *E* and *E'* are at the lowest positions of their travels. The eccentric must come over to its extreme position in order that the valve may be picked up. Owing to the dashpot and method of cut-off on a Corliss engine, this arrangement can be applied, but is not applicable to any other type of valve.

For the purpose of illustration let it be assumed that the steam valves pick up and do not cut off through the medium of the knock-off cam, and let us follow the action of one valve through one revolution of the

crank. In Fig. 179, the valve cranks are in their extreme positions, and the eccentrics likewise, with everything ready to start in the direction of the arrows. On the crank end the steam valve is lapped and the exhaust valve is open, while reverse conditions exist on the head end. On all other types of valve gear the eccentrics would be advanced 90 degrees when the valves are lapped, but on this engine the steam valve is lapped when the eccentric is on its extreme position. The exhaust valves are the same as on any other double-eccentric Corliss engine.

In order to get the positions of the eccentrics in relation to the crank, we will advance the steam eccentric until the proper amount of

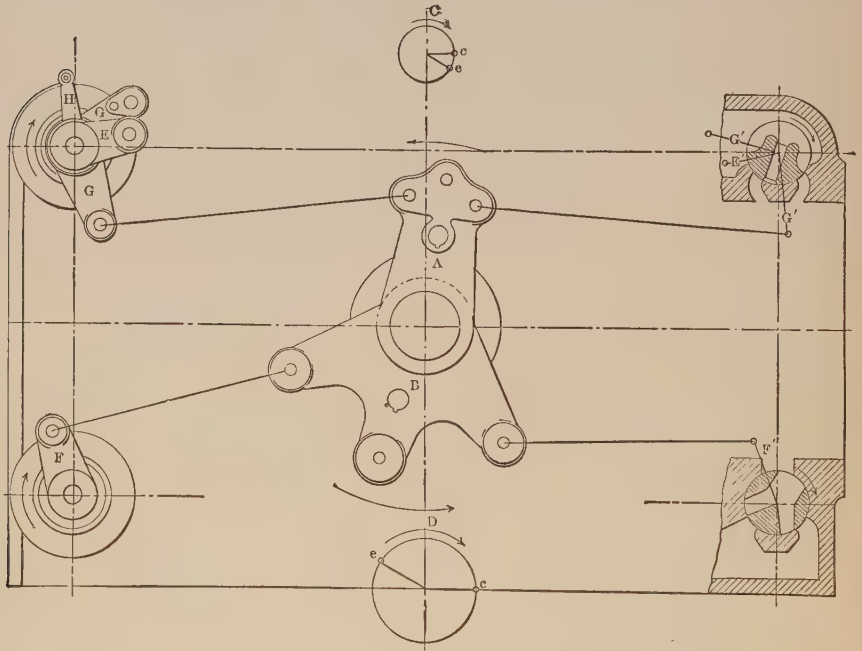


FIG. 180.

lead is obtained, and the exhaust eccentric until the proper amount of closure is reached. From Fig. 180 it will be seen that the steam eccentric is only some 30 degrees in advance of the crank, or only enough to overcome the lap and lead, and the exhaust eccentric follows the crank. Assuming that the eccentrics have been made fast to the shaft in these relative positions, we will now move the crank around in the direction of the arrows until the position shown in Fig. 178 is reached, where it will be noted that the crank has advanced on the first half of its revolution some 60 degrees or thereabout.

In Fig. 181 the eccentrics are shown in their extreme positions opposite to that at which they started and the steam valve is shown wide open

with the exhaust valve closed as far as it will go. The next positions indicated in Fig. 182 show the steam valve closed when the crank has reached approximately 75 per cent. of its return stroke. This would, of course, prevent the practical operation of the engine unless the regulator, through the knock-off cam, does its work of cutting off at the proper moment.

It is well to bear in mind that when the steam valve carries out to the latest point of cut-off, it is released before the other steam valve picks up to open, and that while the release of the steam valve varies, the pick-up does not. It is thus impossible for both steam valves to be open

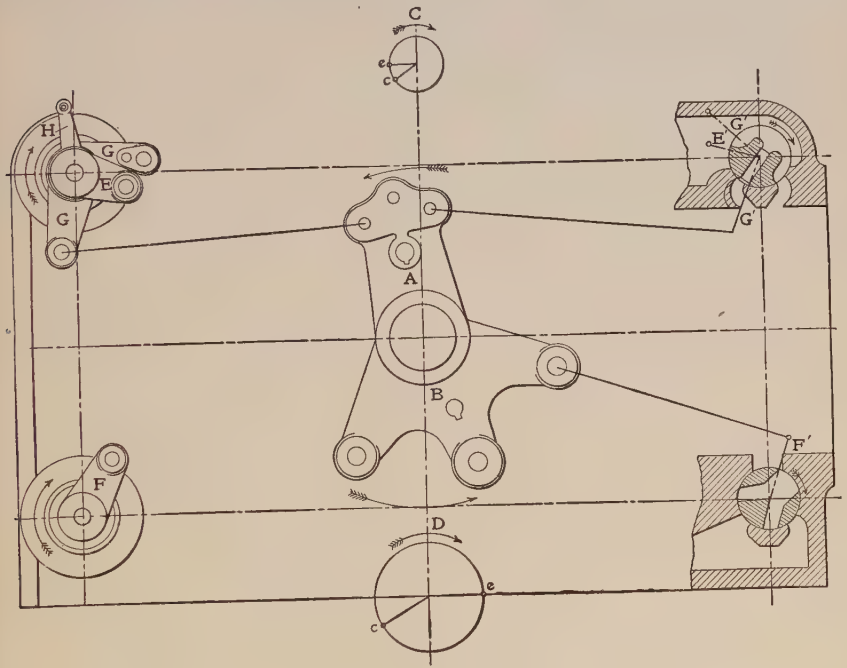


FIG. 181.

at the same time, although they may appear to be arranged to the contrary. On an ordinary Corliss engine the valves will hook up without releasing when the regulator is at its lowest working position, but with this type the valves are released alternately every stroke, no matter how low the regulator, unless it is in the safety position, when the valves would not pick up at all.

## Setting the Valves

Bearing these points in mind we may proceed to set the valves. The amounts of lap and lead and the positions of the cranks from the center

lines given herewith are for engine cylinders of 36-, 42-, 48-, and 60-in. stroke.

First set the wrist plates central and clamp them in place; then adjust the lengths of the rods so that the steam valves are open $\frac{11}{32}$ in., as shown in Fig. 178, and the exhaust valves are lapped $\frac{3}{16}$ in. If the rod lengths are right the center lines of the cranks $E$ and $E'$ will coincide, the pins of the cranks $F$ and $F'$ will be $\frac{1}{2}$ in. from the center line, as shown, and the pins on each end of the bell cranks $G$ and $G'$ will be $2\frac{7}{8}$ ins. and $\frac{9}{16}$ in. from the center lines. When the valves

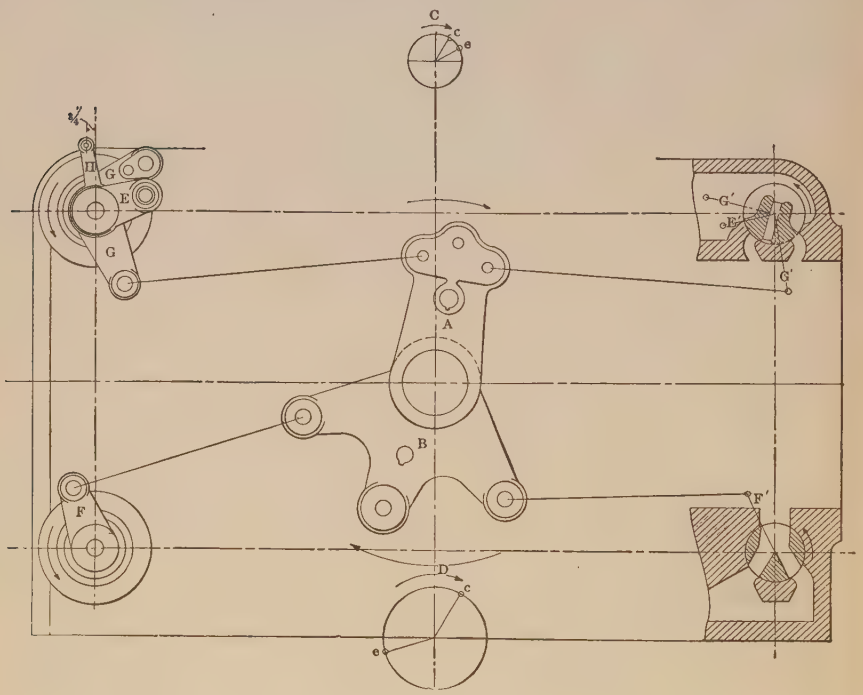


FIG. 182.

have been set with the wrist plates central, release the wrist plates and roll the eccentrics around the shaft to test them and the reach rods, and see that they are of the right length to make the wrist plate travel equally each side of the center line.

Then place the crank on center and pull the steam eccentric around enough to give $\frac{1}{32}$-in. lead, and make it fast. Next move the engine around in its direction of travel to about 95 degrees of its stroke and move the exhaust eccentric around until the exhaust valve on the same end is just opening or releasing. Make the exhaust eccentric fast and move the engine around its full revolution and check off the valves on

the other end and the exhaust closure. Then set the regulator up to its central position and adjust the lengths of the rods from the lever to the knock-off cams, so that the pins of the cams $H$ and $H'$ will set $\frac{3}{4}$ in. off the center line, as in Fig. 178. Let the regulator down and hook up the wrist plates; then pull the engine around to make sure that the steam valves are released on each stroke alternately at not later than eleven twelfths of the stroke, and always before the other valve picks up.

## XIX

## THE DUPLEX PUMP*

As is well known, the slide valves of a duplex pump have neither outside nor inside lap. This is necessary to prevent the pump from stopping should the valves be in a position to cover all ports. By making the length of the valve the exact distance from the outside edge to the outside edge of the steam port, and the exhaust cavity the exact distance from the inside edge to the inside edge of the exhaust port, there is only one point in the travel of the valve where ports are completely closed; and it is not likely, if it ever should happen that both valves were in this position, that the pump would fail to start off, for the leakage of steam past the edges of the valves will never be exactly the same in all four corners, therefore the equilibrium would be destroyed quickly.

By setting the outside edges of the valves "line on line" with the outside edges of the steam ports, the valves will stand in a central position. If, then, both rocker arms are put in a central or vertical position, the clearance on the valve rod must be the same on both ends. In Fig. 183 this clearance is shown inside of the steam chest and is marked $C$. On larger pumps usually, a lost-motion link is inserted between the crank and the valve-rod clevis, which can be adjusted without taking off the steam-chest cover. No fixed rule can be given for the amount of this clearance, as it must be adjusted to suit the working of the pump.

On a pump of ordinary proportion, such as a boiler feed pump, the total clearance, $2\,C$, should equal about 25 per cent. of the travel $T$ of the crank pin at nominal stroke. On a low-service pump (also on a pressure pump for moderate pressure) it is often found that the reciprocating parts are so heavy that the cushion, with the cushion valve shut tight, is not sufficient to stop the motion of the piston at the end of the stroke. In this case the lost motion should all be taken up. If the piston does not make a full stroke, the lost motion may be increased somewhat above the figure given, but it must be kept in mind that this will reduce the travel of the valve and the port opening, and thus may affect the speed of the pump.

*Contributed to *Power* by F. F. Nickel.

### The Cross-exhaust Valve

In the case of a compound pump there is still another appliance that can be brought into action to regulate the length of the stroke, and that

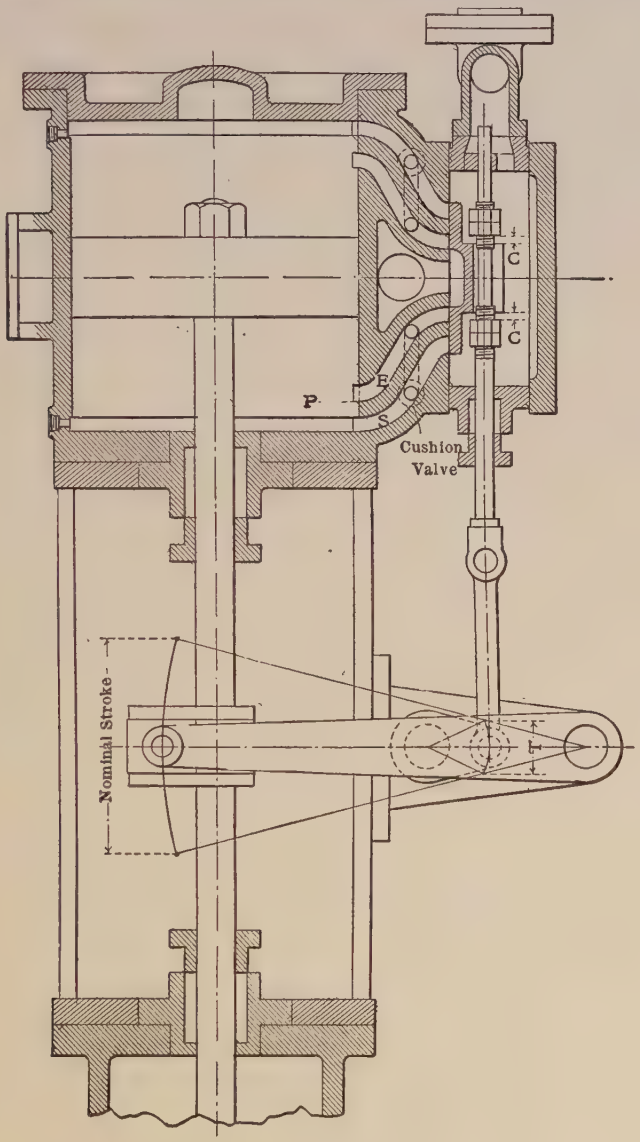


FIG. 183.

is a connection, provided with a valve, between the two high-pressure exhaust pipes. The object of this connection is to equalize the pressure in

these exhaust pipes and make it more uniform. This is called the cross exhaust, and its influence on the distribution of steam is clearly shown by Figs. 185 to 190 inclusive. Figs. 185 to 188, inclusive, are convenient sec-

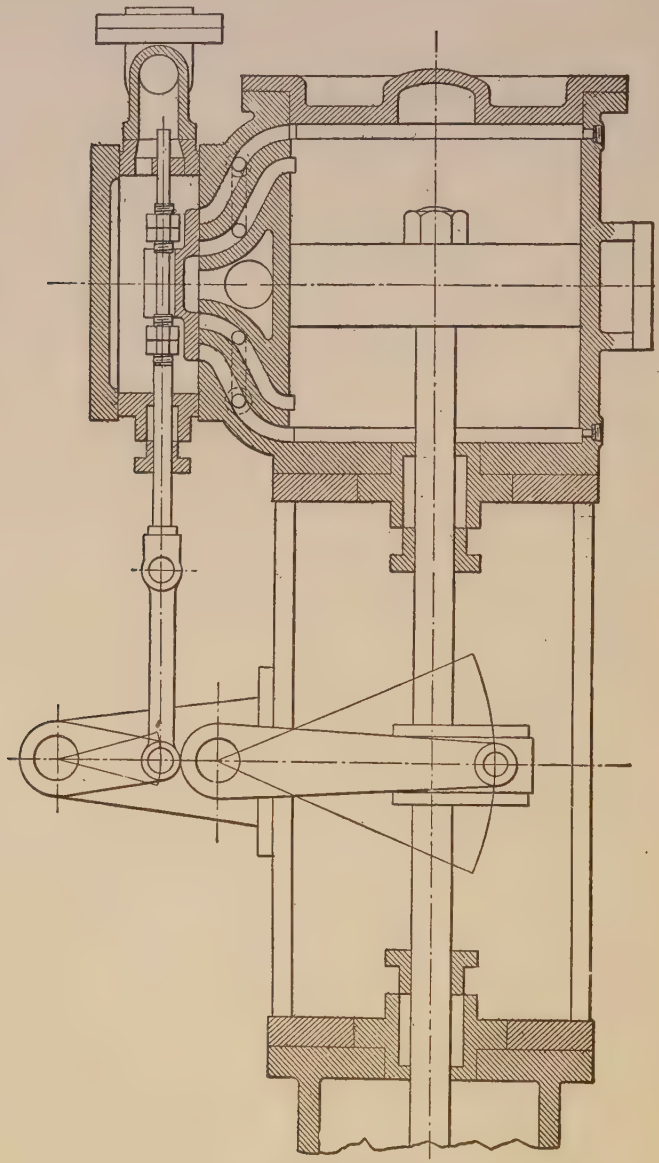

FIG. 184.

tional plans of the steam cylinders of a compound pump, with the pistons in positions that correspond to lines $A$—$B$ and $B$—$C$ in the diagram Fig.

190. Fig. 189 represents a diagram with the cross exhaust closed. The steam pressure follows up the full stroke in the high-pressure cylinder, and when the exhaust valve opens it blows into the intermediate space and mixes with the steam left therein from the preceding stroke.

Assuming the intermediate space to have a volume equal to 0.75 of that of the high-pressure cylinder and a cylinder ratio of 1 to 3, we have the following volumes:

High-pressure cylinder = 1; intermediate space = 0.75; low-pressure cylinder = 3.

Clearances are neglected, as it is only intended to show the action of the cross exhaust. We will also assume that the steam expands according to Mariotte's law:

$$p \times v = \text{constant},$$

which is sufficiently accurate for our purpose, and assists greatly in getting a clear conception of the behavior of the steam as it passes through the various stages.

The amount of steam passing through one side of the engine is evidently one high-pressure cylinder full at initial pressure. Its measure is $p \times v = 120 \times 1 = 120$ lbs. When the high-pressure exhaust valve opens, this steam flows into the intermediate space, where it meets and mixes with steam that was left there from the preceding stroke. This steam was shut off from its communication with the steam in the low-pressure cylinder when its exhaust valve opened and must be at the same pressure as the steam in the low-pressure cylinder at the point of exhaust. As the ratio of cylinders was assumed to be as 1 to 3, the steam expands three times as it passes from the high-pressure cylinder to the low-pressure cylinder, and the terminal pressure is therefore

$$\frac{120}{3} = 40 \text{ lbs.}$$

It will be noted that 120 is a measure for the steam passing through the engine and this amount is accounted for by the indicator diagram at every point of the stroke. Thus we have:

High-pressure cylinder, $p \times v = 120 \times 1 = 120$.

Low-pressure cylinder, $p \times v = 40 \times 3 = 120$.

The amount of steam that is constant and remains in the intermediate space is $0.75 \times 40 = 30$ lbs.; the two combined give $120 + 30 = 150$ lbs., which when distributed over a volume of $1 + 0.75 = 1.75$ results in a pressure of

$$\frac{150}{1.75} = 85 \text{ lbs.}$$

This means that when the high-pressure exhaust valve opens the steam expands from the high-pressure cylinder into the intermediate space from 120 to 85 lbs. without doing any useful work. From 85 lbs. it then ex-

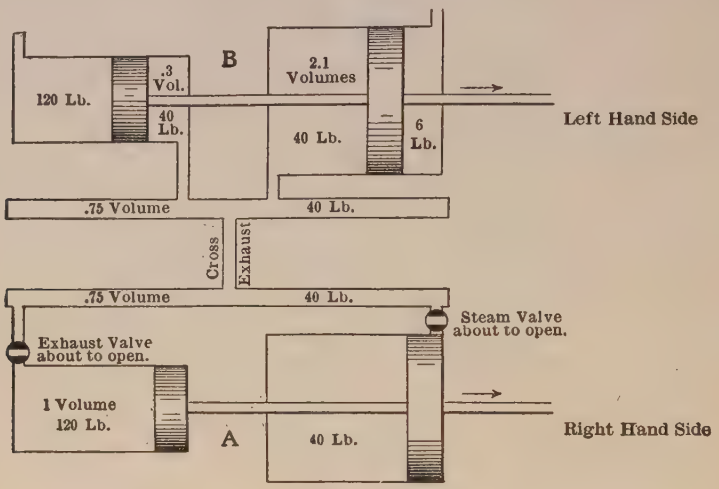


FIG. 185.

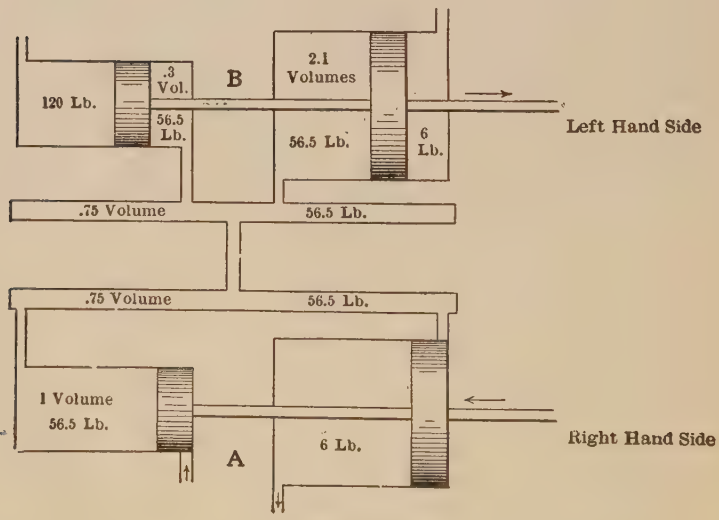


FIG. 186.

pands from the high-pressure cylinder through the intermediate space into the low-pressure cylinder doing useful work upon the low-pressure piston.

With two points of the expansion curve, namely, 85 lbs. at the beginning and 40 lbs. at the end of the stroke, it is now easy to construct the remainder of the curve, as it is only necessary to complete the rectangle

and draw the diagonal. Where this diagonal meets the line of zero pressure, there is point *o*, the zero point of pressure and volume. Any line drawn through this point *o* will give the volume on the line *85*, Fig. 189, and its corresponding pressure on line *A*, Fig. 190.

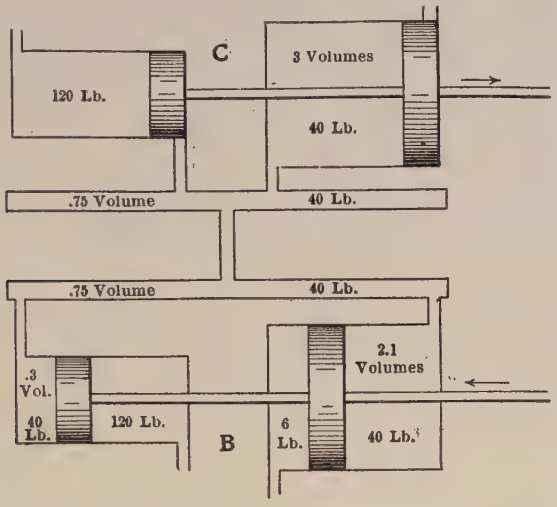


FIG. 187.

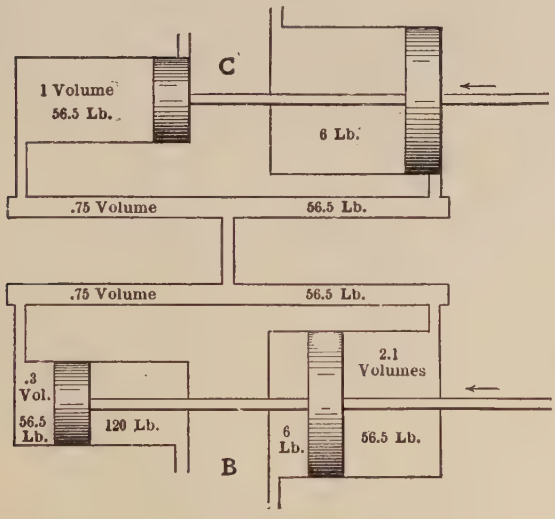


FIG. 188.

Under the conditions indicated in Fig. 189, it cannot be expected that an ordinary pump will work satisfactorily, as the following comparison of the steam forces will show:

Beginning of stroke:

H. P., $120 - 85 =$ 35
L. P., $85 - 6 = 79 \times 3 =$ 237
Total steam force..... 272 lbs.

End of stroke:

H. P., $120 - 40 =$ 80
L. P., $40 - 6 = 34 \times 3 =$ 102
Total steam force ..... 182 lbs.

The average of the two, or

$$\frac{272 + 182}{2} = 227 \text{ lbs.},$$

is a measure of the resistance which, in a pump, is constant throughout the stroke. There is, therefore, at the beginning of the stroke, a surplus of

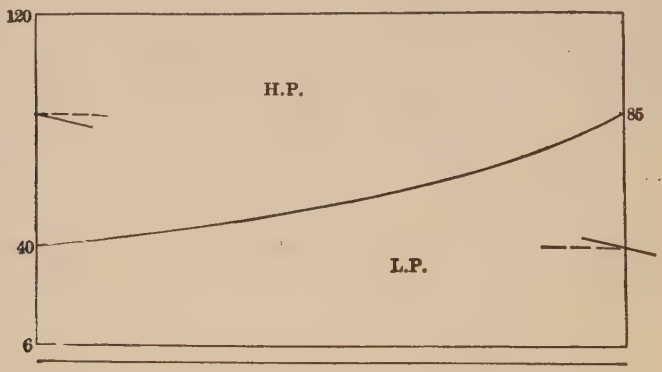


FIG. 189. — CROSS EXHAUST CLOSED.

$272 - 227 = 45$ lbs., and at the end a deficiency of $227 - 182 = 45$ lbs. If, however, the cross exhaust is opened, it equalizes these two forces to a certain extent and modifies the diagram, as shown in Fig. 190.

With the assistance of Figs. 185 to 188, inclusive, it is easy to follow the steam through its various stages. In Fig. 185 the pistons of the right-hand side have completed the stroke and are about to return. The cylinders on the other side and intermediate spaces are filled with steam at the low-pressure terminal, or 40 lbs. The total amount of steam is then

$120 \times 1 =$ 120
$40 \times 3.9 =$ 156
Total ..... 276

which divided by the volume, 4.9, gives a resulting pressure of

$$\frac{276}{4.9} = 56.5 \text{ lbs.},$$

as shown in Fig. 186. This increased pressure gives the low-pressure piston of the left-hand side an additional push and enables it to complete its stroke while the steam expands down to 40 lbs. again. Then the steam

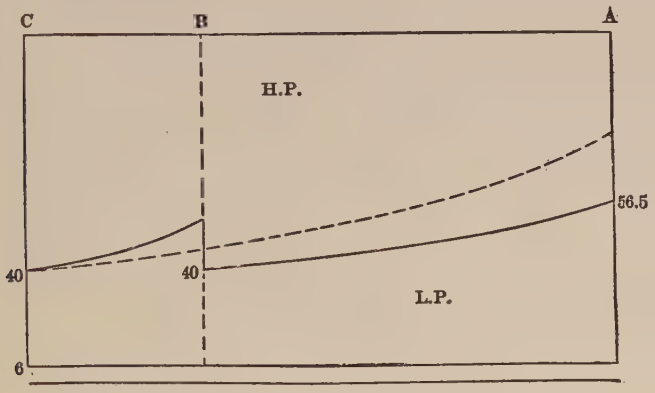


FIG. 190. — CROSS EXHAUST OPEN.

from the left-hand high-pressure cylinder flows into the intermediate space and raises the pressure to 56.5 lbs. in order to help out the right-hand low-pressure piston.

Fig. 190 shows this action clearly, but in practice the rise in pressure will not be as abrupt as shown there, as the pulsations in the pipes will still more equalize the differences and produce a practically uniform pressure in the intermediate space.

It will also be noted that by opening the cross exhaust, pressure is removed from the low-pressure piston and shifted over to the high-pressure piston, which results in a loss of power and reduced speed of the pump.

The cross exhaust should therefore be kept closed whenever the pump runs fairly well in this condition.

## XX

## AIR COMPRESSORS *

In an air compressor, as well as in a steam engine, clearance between the piston and cylinder heads has to be allowed, for mechanical reasons, when the piston reaches the end of its stroke. This clearance space is augmented by the cubical contents of the suction and discharge ports, the pockets for piston-rod nuts, etc. The clearance volume should be made as small as possible for the following reasons:

(*a*) To diminish the friction loss due to compressing and reëxpanding of the air confined in the clearance space at the end of the stroke.

(*b*) To attain as high volumetric efficiency as possible.

(*c*) To avoid the slow opening of suction valves, which increases the suction loss.

Using the same lettering to distinguish the various sections, an explanation of these points may be made as follows:

(*a'*) The energy contained in the air confined in the clearance space ought not to be lost; this air should be reëxpanded on the return movement of the piston, thus giving back most of the work required for its compression. Part of this work, however, will be lost in the friction of the air compressor and, on account of the work unavoidably expended in friction during the compression and reëxpansion of the air, it is desirable to make the clearance volume as small as possible.

(*b'*) The suction air valve must not be opened before the compressed air in the clearance space has been reëxpanded; if it is opened before the pressure has been reduced by such expansion to that of the air supply, compressed air will rush out through the suction ports and the energy stored up in this air be lost. The larger the clearance the later the suction valve should be opened for the admission of fresh air; consequently, the smaller will be the quantity of fresh air taken in, and the capacity of the compressor is correspondingly reduced. The volumetric efficiency of a compressor is the ratio of the volume of air in cubic feet taken in through the suction valves to the displacement of the piston in cubic feet, provided the valves are tight.

To show the influence of an increase in clearance on the volumetric

* Contributed to *Power* by Claude Aikens.

efficiency of an air compressor, let us assume a 22 × 36-in. air compressor taking air in at atmospheric pressure, discharging it at 30 lbs. gauge and having 1½ per cent. clearance, as compared with one having 5 per cent. clearance.

The cylinder volume being proportional to the stroke, the clearance volume may be expressed in inches of stroke; thus, 1½ per cent. clearance equals $0.015 \times 36 = 0.54$ in. of stroke. The air confined in the clearance space expands very nearly adiabatically; that is, not losing any heat to its surrounding walls or receiving any from them, especially if the heads of the air cylinder are not cooled. The formula for adiabatic expansion of air is:

$$P\,V^{1.41} = Constant,$$

where

$P$ = pressure per square inch,

and

$V$ = volume in cubic feet.

The part of the stroke required for the reëxpansion of air from 44.7 to 14.7 lbs. absolute is

$$\left[\left(\frac{44.7}{14.7}\right)^{\frac{1}{1.41}} - 1\right] \times 0.54 = 0.648.$$

The volumetric efficiency, as far as clearance is concerned, is therefore

$$\frac{36 - 0.648}{36} = 0.982;$$

or the capacity of the air compressor is $100 - 98.2 = 1.8$ per cent. less than the piston displacement.

As the percentage of decrease in capacity is directly proportional to the percentage of clearance, with 5 per cent. clearance the capacity will be decreased

$$\frac{5 \times 1.8}{1.5} = 6 \text{ } per\ cent.$$

(*c'*) Another and very important reason for desiring small clearances in air compressors having positively operated suction valves is that the opening of the suction valve becomes the slower in relation to the speed of the piston the later it opens, or, in other words, the larger the clearance.

If the suction valve begins to open when the piston moves at a comparatively high speed, the air has to assume a high velocity in order to follow the piston. As a consequence, the pressure in the air cylinder will be considerably lower than that of the outside air and the work the compressor has to do is uselessly increased.

### Determining Relative Positions of Crank Pin and Eccentric

The relative positions of the crank pin and eccentric may be determined graphically or by calculation.

Assuming the same conditions as stated, the part of the stroke required for reëxpansion from 44.7 lbs. absolute to 14.7 lbs. absolute is 0.648 in. Graphically, proceed as follows: In Figs. 191 and 192 draw the crank-pin circle, $R = 18$ ins., and find the ends of stroke of compressor, $2R = 36$ ins., by laying off the length of the connecting rod, $L = 108$ ins., from the extreme crank-pin positions; then measure the points $X = 0.648$ in. from each end of the stroke, giving the piston positions at which the suction valve should open. With $L$ as a radius and the points $X$ from the ends of the stroke as centers, determine the points of intersection with the crank-pin circle. This gives the positions of the crank pin at which the inlet valve should open.

By calculation the crank angle corresponding to a piston movement of 0.648 in. is:

For head end (see Fig. 191),

$$Cos.\ y = \frac{R^2 + B^2 - L^2}{2R\,B} = 1 - \frac{X\,(2L - X)}{2R\,(L - X + R)}$$

$$= 1 - \frac{0.648\,(216 - 0.648)}{36\,(108 - 0.648 + 18)} = 0.96908$$

$$= 14\ degrees\ 17\ minutes.$$

For crank end (see Fig. 192),

$$Cos.\ y = \frac{L^2 - R^2 - B^2}{2R\,B} = 1 - \frac{X\,(2L + X)}{2R\,(L - R + X)}$$

$$= 1 - \frac{0.648\,(216 + 0.648)}{36\,(108 - 18 + 0.648)} = 0.95698$$

$$= 16\ degrees\ 52\ minutes.$$

The suction valve on the crank end should, therefore, open when the crank has moved 16 degrees 52 minutes past the dead center and, of course, it should close just when the crank reaches the inner dead center, so that the suction valve opens and closes while the crank travels through an angle of

$$180\ degrees - 16\ degrees\ 52\ minutes.$$

The eccentric moves through the same angle as the crank, and its opening motion must be equal to its closing motion; it has, therefore, an equal amount of motion on each side of the horizontal center line during

the suction period of the compressor. The position of the eccentric, when opening the suction valve, must be

$$\frac{180 \text{ degrees} - 16 \text{ degrees } 52 \text{ minutes}}{2} = 81 \text{ degrees } 34 \text{ minutes}$$

from the inner dead center, the valve gear being designed with the eccentric leading the crank.

Due to the angularity of the connecting rod, the position of the eccentric for the forward and return stroke would not be the same. A compromise may be made, but it is sufficient to decrease the lap of the suction valve at the head end, so that the valve opens at the proper time. It will close, then, a trifle after the crank has passed the dead center, in this case about 2 degrees 35 minutes late (see Fig. 193). The reason for this may be seen from the fact that the inlet valve at the head end opens after the crank has passed 14 degrees 17 minutes beyond the dead center; the center of the eccentric will be

$$81 \text{ degrees } 34 \text{ minutes} + 14 \text{ degrees } 17 \text{ minutes} = 95 \text{ degrees } 51 \text{ minutes}$$

from its dead center at the head end, or 5 degrees 51 minutes beyond its mid travel. The inlet valve remains open until the eccentric reaches the corresponding position on its return stroke. Opening and closing must, therefore, take place while the eccentric travels through

$$180 \text{ degrees} - (2 \times 5 \text{ degrees } 51 \text{ minutes}) = 168 \text{ degrees } 18 \text{ minutes.}$$

The crank moves through the same angle and the piston from the dead center at the head end is

$$14 \text{ degrees } 17 \text{ minutes} + 168 \text{ degrees } 18 \text{ minutes} = 182 \text{ degrees } 35 \text{ minutes.}$$

The piston is, therefore, on its return stroke and has traveled a distance equal to the radius of the crank times

$$1 - \textit{Cos. } 2 \text{ degrees } 35 \text{ minutes} = R\ (1 - 0.999) = 0.018 \text{ in.,}$$

an insignificant amount.

Referring to the valve gear itself, the working edges of the valves and ports are shown by radial lines $A$, $B$, and $C$, Fig. 194, on the ends of the valves and valve chests, at the side of the cylinder opposite the wrist plate; for each port there is a mark on the cylinder coincident with the edge of the port which is toward the end of the cylinder barrel; and for each valve a mark on the back end of the valve coinciding with the edge of the valve which is toward the end of the cylinder barrel.

Fig. 195 shows the wrist-plate central for adjusting the valve connections. A central mark on the back hub of the wrist plate and three marks

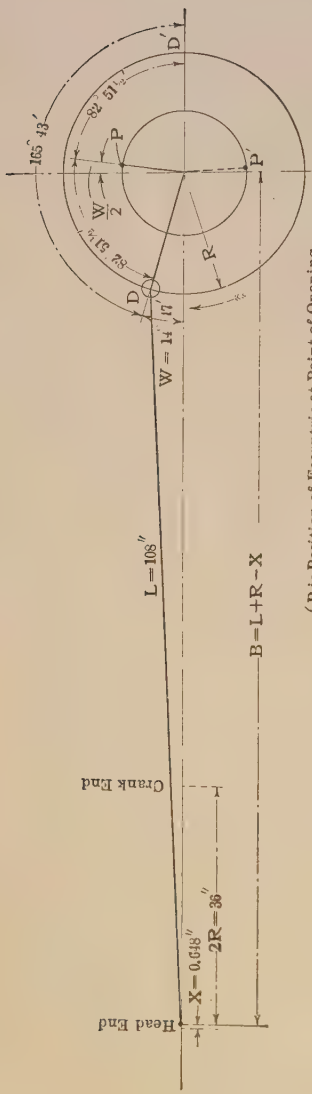


P is Position of Eccentric at Point of Opening
Inlet Valve { P' " " " " " Closing
D " " " " " Opening
D' " " " " " Closing

FIG. 191

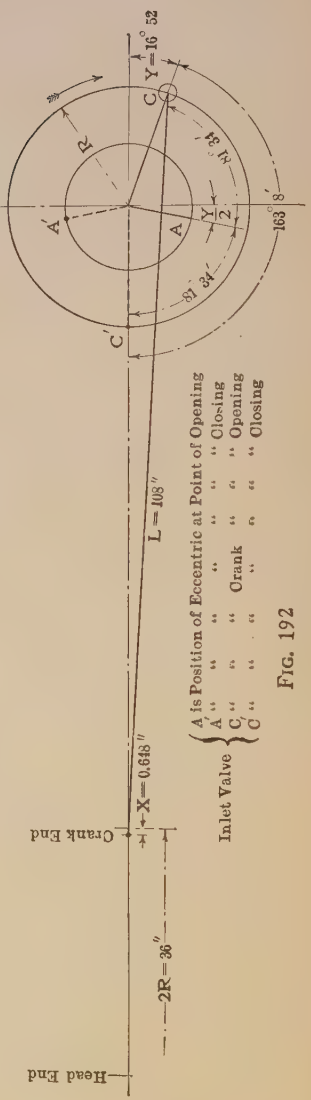


A is Position of Eccentric at Point of Opening
Inlet Valve { A' " " " " " Closing
C " " " " " Opening
C' " " " " " Closing

FIG. 192

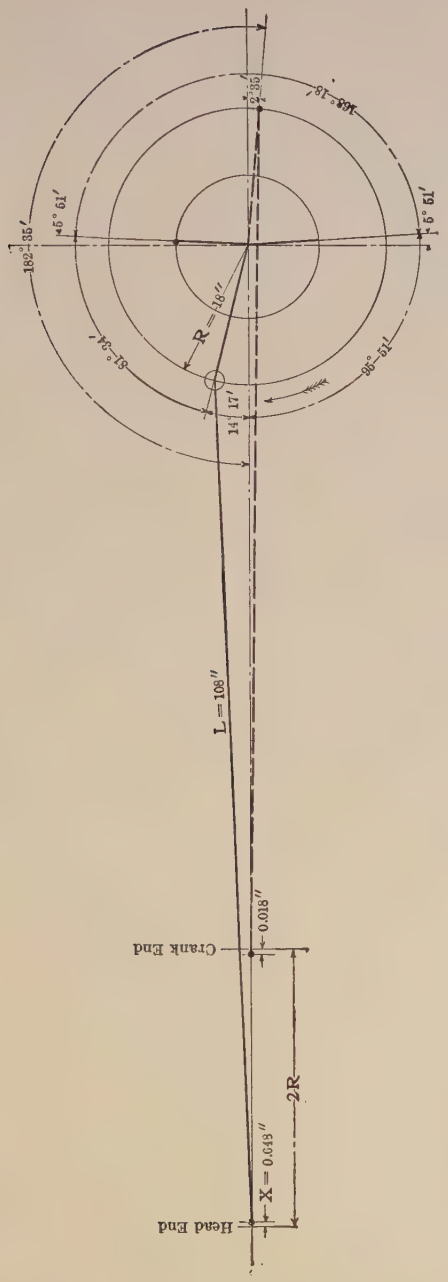
2° 35′
168° 18′
5° 51′
5° 51′
182° 35′
R = 18″
81° 34′
95° 51′
14° 17′
L = 108″
0.018″
Crank End
2R
X = 0.648″
Head End

FIG. 193.

on the wrist-plate stand, which is bolted to the cylinder, show how the eccentric motion is to be adjusted so that the wrist plate will travel correctly when in motion. The two outer marks indicate the extremes of travel, and the central mark of the wrist plate, when in line with the single mark on the hub, shows that the wrist plate is central.

### To Set the Suction Valve

To set the suction valve as shown in Fig. 195, first place the mark on the wrist-plate hub even with the central mark on the wrist-plate stand; then adjust the valve connections to give the suction valves the lap shown

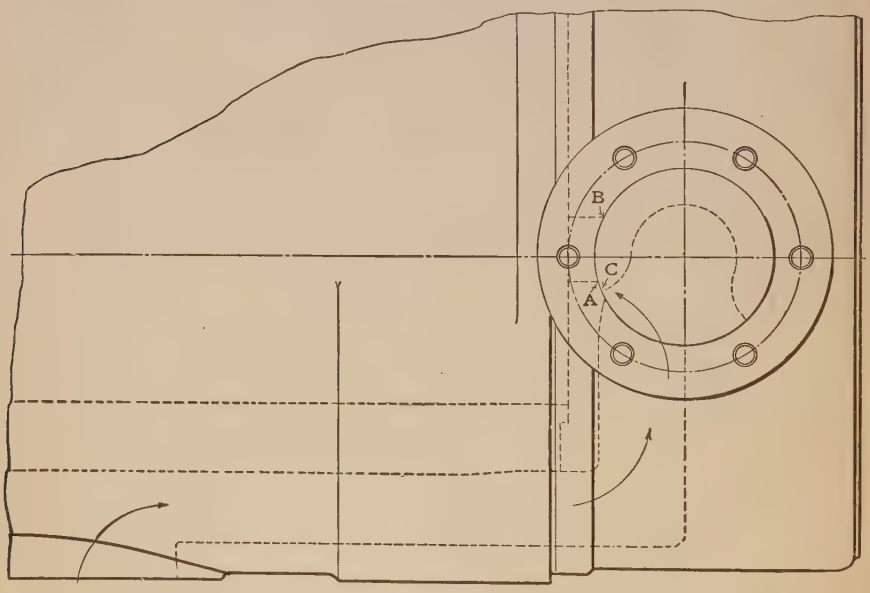


FIG. 194.

on the drawing. The wrist plate should now be connected to the eccentric by the rods and, being in its central position, the rods must be adjusted so that the eccentric also is in its center of motion. The eccentric can now be secured to the crank shaft after the crank pin is moved relatively to the center of eccentric until the angle included between their respective centers is as determined by the calculation given; in the example, 81 degrees 34 minutes, the eccentric leading the crank in the direction of motion.

After the valves have been set as accurately as possible when cold, and the movement of the forward and back strokes equalized, as explained, indicator diagrams should be taken and the eccentric rod adjusted to correct any slight irregularities.

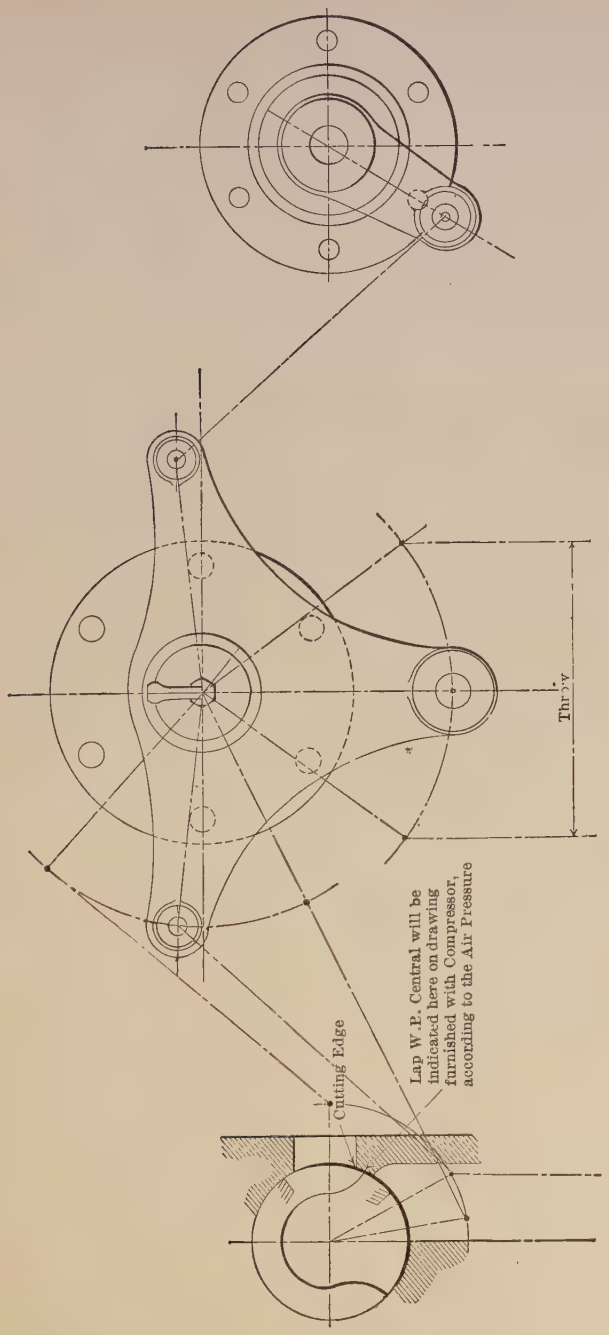
Throw
Lap W.P. Central will be indicated here on drawing furnished with Compressor, according to the Air Pressure
Cutting Edge

FIG. 195.

For single-stage air compressors and in the high-pressure cylinders of two-stage air compressors the Allis-Chalmers Company, of Milwaukee, uses as a standard the arrangement of valves shown in Fig. 196. Rotary valves are used for the inlet and plain single-beat poppet valves for the discharge. The inlet valves are driven by an eccentric on the main shaft, and, by means of the wrist plate, they are given the quick opening and closing, and the slow movement when the ports are covered and the valves under pressure, which is characteristic of the Corliss valve gear. The inlet ports are of ample size, short and direct, and the air is guided into the cylinder by an easy curve, thus reducing the entering friction and insuring the complete filling of the cylinder with as little loss in pressure and at as nearly the outside pressure as possible.

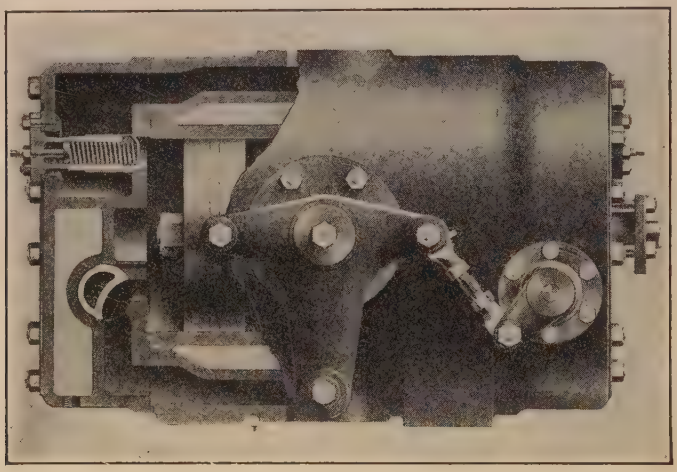

FIG. 196. — AIR CYLINDER WITH AUTOMATIC DISCHARGE.

The discharge valves are of the drawn-steel cup type and open automatically when the pressure in the cylinder equals the discharge pressure.

A modification of the valve gear shown by Fig. 196 is illustrated in Fig. 197. In this gear the inlet valves are operated the same as in Fig. 196, but the discharge valves are mechanically closed, being free to open automatically, and positively closed by plungers operated by connections to a wrist plate driven by an eccentric on the main shaft. The movement of the plungers of the discharge valves is so timed as to positively bring the valves to their seats just as the piston reaches the end of its stroke, thus avoiding any slip of air back by the valves and also to avoid slamming when the piston commences to return. This design is also indicated by Fig. 199, showing the valve gear of a blowing engine. As soon as the valves are closed the plungers recede, leaving the valves held to their seats by the discharge air pressure until that point in the return stroke of the

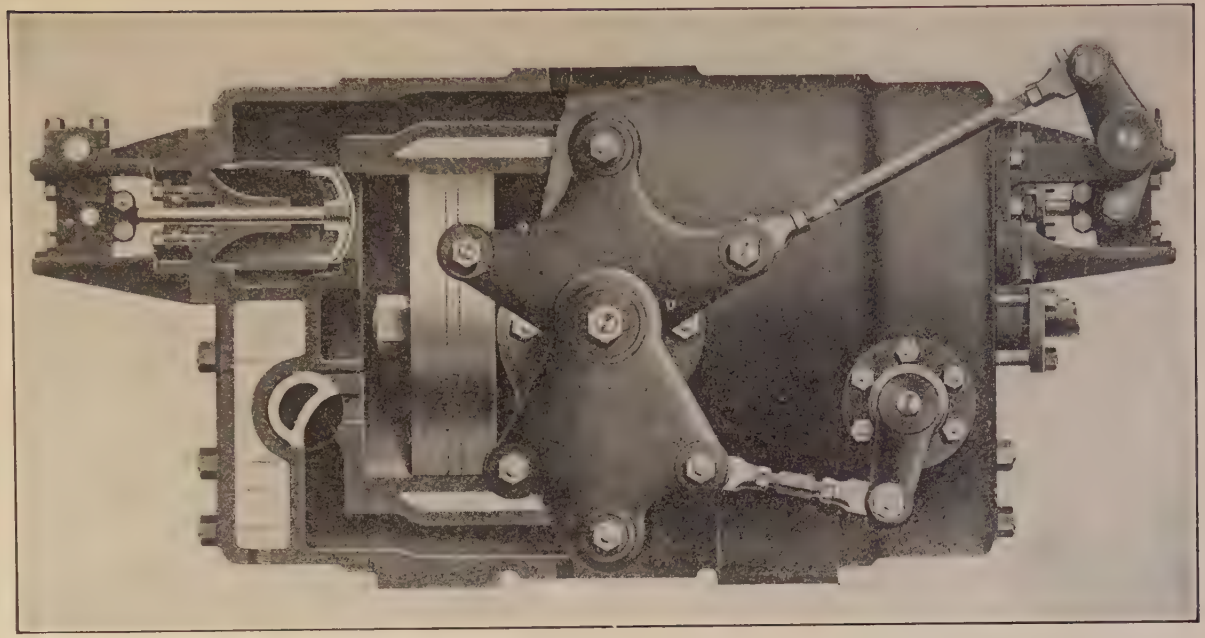

FIG. 197. — AIR CYLINDER WITH MECHANICAL DISCHARGE VALVE.

piston is reached where the pressure in the cylinder equals the discharge pressure, when the valves are free to open automatically. In closing, the air between the plunger and valve forms a cushion which is so adjusted and gradually reduced that the valve is brought gently to its seat without noise or pounding.

A third type of valve gear is shown in Fig. 198. In this both the inlet and discharge valves are of the rotary pattern, positively operated by independent eccentrics on the main shaft. The inlet valves are the same as decribed in the two preceding types. The discharge valves are so proportioned and adjusted as to close positively just as the piston reaches the

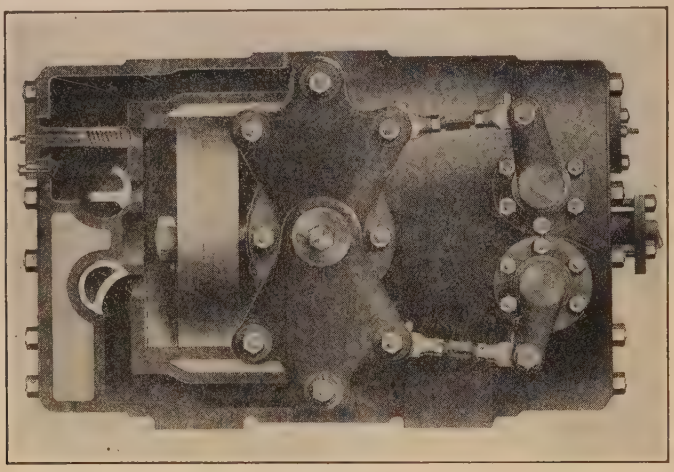

FIG. 198. — AIR CYLINDER WITH MECHANICAL DISCHARGE VALVE.

end of its stroke and to open at any predetermined maximum discharge pressure required. In addition to the rotary discharge valves, the cylinder is fitted with auxiliary poppet valves of the steel-cup type, which serve as relief valves in case the eccentric should slip; or for allowing the air to be discharged from the cylinder, should the pressure, for any cause, fall below that at which the main discharge valves are set to open.

## How to Set Blowing-engine Valves

Having considered the procedure necessary for setting the air valves of compressors, together with some of the factors involved in their design, it will be of interest, in conclusion, to note the directions to be followed in the case of a blowing engine, which, although very simple, is sometimes puzzling to operating engineers lacking exact information on the subject.

Referring to Fig. 199, when the engine crank pin is on either the top

or bottom dead center, set the wrist plate exactly central; that is, when the piston is at the top or bottom of the stroke, the pins $M$ $M'$ should lie in a straight line between $P$ $C$ and $P$ $C'$.

For setting the inlet valves first put the piston at the top of its stroke, the wrist plate being central, adjust the connections $B$ and $B'$ until the

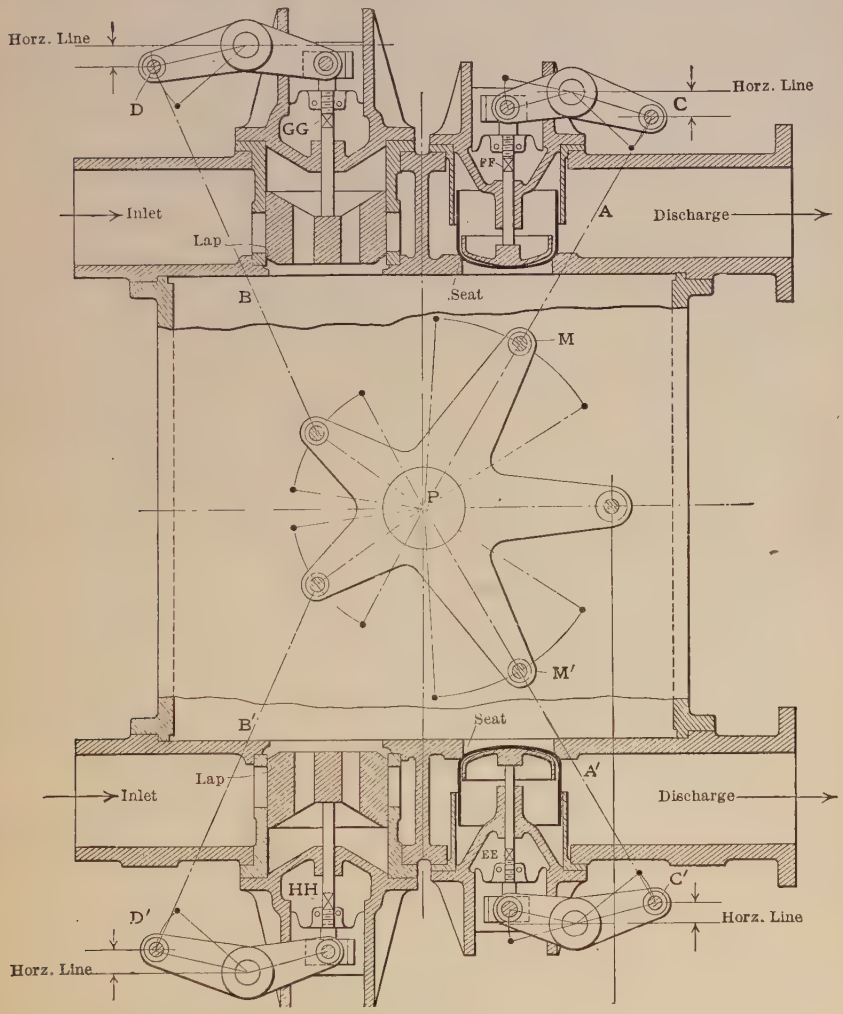


FIG. 199.

inlet pins $D$ $D'$ are —— inches from the horizontal line, and adjust the valve stems $G$ $G$ until each of the top inlet valves are lapped —— inches. Next turn the engine over, set the piston at the bottom of the stroke, the wrist plate again being central, adjust the valve stems $H$ $H$ until each of

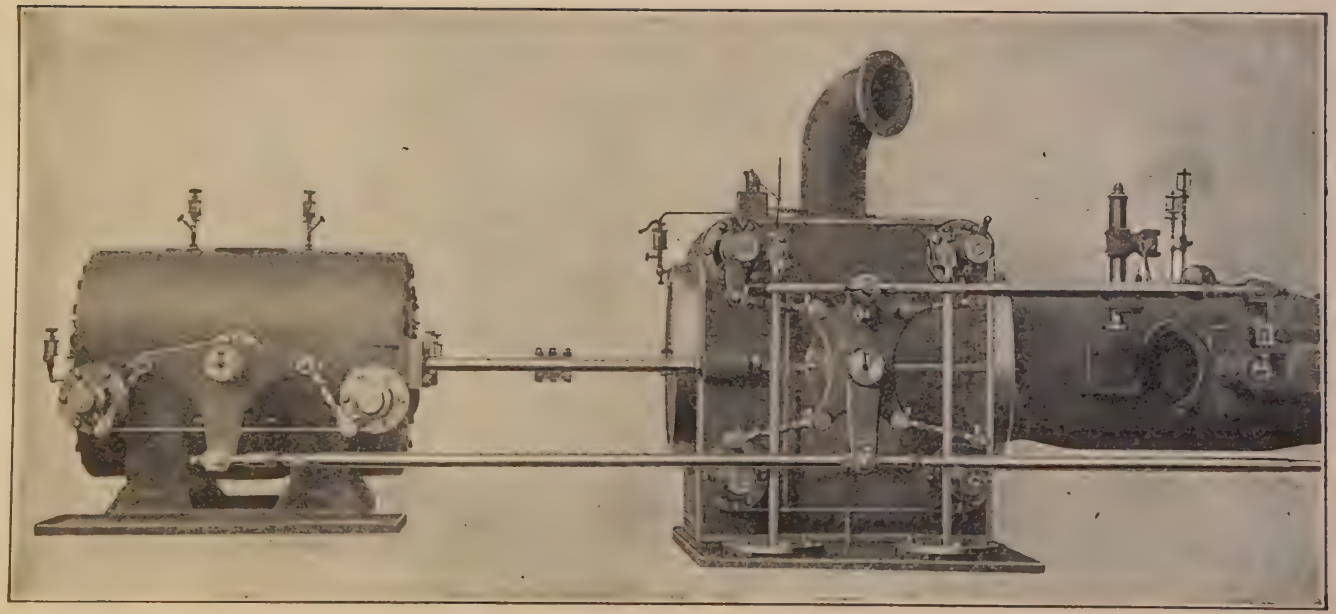

FIG. 200. — CROSS-COMPOUND TWO-STAGE AIR COMPRESSOR, SHOWING LOW-PRESSURE CYLINDER AND VALVE GEAR.

the bottom inlet valves is lapped —— inches; then lock the valve stems securely.

For setting the discharge valves, put the piston at the bottom of the stroke, the wrist plate being central, adjust the connections $A$ and $A'$ until $C$ and $C'$ are each —— inches from the horizontal line, and then adjust the valve stems $E\,E$ and $F\,F$ until each of the valves touches its seat; then turn off a quarter turn and lock them. Then turn the engine over and set the piston at top of the stroke and see that the valves are in the same position as when the piston was at the bottom.

The amount of lap, etc., indicated by the spaces in these directions varies, of course, with each machine, and the figures can either be obtained from the builders, or may be worked out in accordance with the method described earlier in this chapter.

In the various gears described the valves are placed in the cylinder heads, thus reducing the clearance to the minimum; all of these valves are readily accessible and can be removed and replaced without difficulty and without disturbing the adjustment. It may be said, also, that while the foregoing mentions only compressors and blowers for handling air, it applies as well to machines designed for other gases, as far as the general principles involved are concerned. Special apparatus, however, requires special treatment and the builders should in all cases be required to furnish specific directions for setting the valve gear supplied with their machines. Without this, misunderstandings occur which sometimes cause serious trouble.

# INDEX


PAGE

Admission, angle..... 12
effect of angularity of connecting rod..... 15
of changing valve setting..... 20
of steam.....39, 40
openings, maximum..... 101
period..... 13
point of....33, 34, 35, 36, 124
finding..... 21
Advance, angle.....34, 36, 116
angle, finding..21, 22, 23, 24, 26
maximum..... 45
angular, effect of changing.. 127, 128
of eccentric, angular, changing..... 19
Ahead of crank, defined..... 43
Aikens, Claude..... 188
Air compressors..... 188
compressor, volumetric efficiency. 188
with automatic discharge..... 196
cylinder with mechanical discharge valve.....197, 198
Allis-Chalmers Co.....172, 196
Angle behind crank, cut-off valve...44, 45
crank, corresponding to piston movement..... 190
of admission..... 12
of advance.....34, 36, 116
finding.21, 22, 23, 24, 26
maximum..... 45
of rod, correcting for..... 18
finding..... 16
Angular advance, effect of changing.. 127, 128
finding..... 12
of eccentric..11, 84, 99
of eccentric, changing.....19, 20

PAGE

Angularity of connecting rod.....15, 191
of rod, correcting for..... 17

Balanced piston valve..... 135
steam valve..... 115
valves.....93, 96, 103, 108, 113
Behind crank, defined..... 44
Blowing-engine valves, setting..... 198
Brown engine..... 76
governor..... 78
setting valves..... 79
Buckeye engine..... 92
piston valve..... 100

Cam, trip..... 68
Catch block, clearance..... 59
Center, dead.....35, 39, 51
finding.....46, 122
line.....49, 50
putting engine on..... 138
Central marks on hub of wrist plate.. 59
Centralization of valve gear, double eccentric engine..... 61
Circle, crank..... 36
of reference..... 36
valve..... 30
Clearance, amount..... 88
at catch block..... 59
at ends of steam cylinder, equalizing.....53, 54
obtaining..... 80
of cylinder.....53, 54
on valve rod..... 180
space..... 188
Compound engine..... 125
Sturtevant..... 135
Compression..... 126
amount.....82, 148
effect of changing valve setting..... 20
point of.....34, 35, 36

PAGE
Compression, point of, finding ..... 23
Condensing engine, lead of low-pressure valve..... 125
Connecting rod, angle, finding..... 16
angularity .....15, 191
Corliss engines, tables showing principal dimensions and horse power with different steam pressures and points of cut-off.....56, 57
steam engines..... 53
Correcting for angle of rod.....17, 18
Crank angle corresponding to piston movement..... 190
when compression begins, finding..... 27
circle..... 36
on dead center..... 47
pin and eccentric, determining relative positions..... 190
position..... 115
position..6, 7, 8, 9, 30, 32, 33, 39, 40
travel..... 41
Cross-compound engine, setting eccentric..... 127
Cross-exhaust closed..... 186
open..... 187
valve..... 181
Cut-off.....40, 168, 174
adjusting..... 127
changing..... 82
early.....43, 45, 46, 127, 167
Greene..... 62
late.....45, 127, 167
later than one-half stroke..... 45
point of..4, 15, 18, 34, 35, 36, 40, 41, 42, 43, 44, 99, 124
point of, finding.....23, 24
Reynolds long-range..... 172
rods, adjusting, Rice & Sargent engine..... 150
valve.....95, 97
Meyer.....38, 39
operation..... 38
position..... 99
Cylinder pressure..... 96
valves, details..... 107

D slide valve..... 19
Dashpot rod, length.....58, 59, 154
stem, adjusting..... 80

PAGE
Dead center.....35, 39, 51
finding.....46, 122
Details and measurements, Sturtevant compound engines.... 144
of link..... 107
Diagram, indicator.....35, 119
making..... 9
necessary data for constructing..... 36
of high-speed engine..... 35
of side shaft..... 131
taking..... 142
using..... 19
valve, use.....21, 30
Zeuner slide-valve.....23, 29
Dimensions with different steam pressures and points of cut-off, Corliss engines.....56, 57
Double eccentric engine, valve setting, 60, 61
Double-ported main valve..... 97
valves..... 156
Dow, Carl S..... 135
Drainage systems..... 142
Duplex pump..... 180

Eccentric..... 40
adjustable..... 135
low-pressure..... 139
and crank pin, determining relative positions..... 190
angular advance.....11, 84, 99
changing .19, 20
cross-compound engine, setting..... 127
linear advance..... 11
low-pressure, adjusting..... 137
motion, adjusting..... 194
on dead center.....47, 48
point of minimum cut-off... 126
position..3, 6, 7, 8, 9, 32, 39, 40, 41, 45, 46, 51, 115, 176
changing..... 43
rod, length ..42, 73, 75, 170, 171
too long..... 72
setting.....101, 102
travel.....41, 46, 70, 165
Eccentricity, changing..... 20
Engine, Brown..... 76
Buckeye..... 92

PAGE
Engine, changing speed..... 150
compound..... 125
Fitchburg..... 111
Fleming piston-valve..... 121
Greene-Wheelock..... 62
heavy duty..... 156
McIntosh & Seymour..... 84
Porter-Allen..... 103
Putnam..... 130
putting on center..... 138
"Reliance"..... 156
Rice & Sargent..... 145
setting at half stroke..... 51
steam, Corliss..... 53
Sturtevant compound..... 135
Wright..... 159
Equality of maximum admission openings..... 101
Equalizing pressure in exhaust pipes.. 181
Exhaust..... 15
clearance..... 11
effect of changing valve setting..... 20
gear..... 147
lap.....32, 36
definition..... 10
effect of changing..... 128
positive and negative..... 10
lead.....33, 34, 36
motion..... 115
point of..... 17
valve.....68, 113
valves, adjusting..... 75
equalizing movement 81
rod, length..... 60
setting.....81, 148
stem, length..... 81
Expansion, effect of changing valve setting..... 20

Fitchburg engine..... 111
Flat-balanced valves..... 108
Flat-side valves..... 103
Flat valve.....93, 96, 108
Fleming piston-valve engines.....121

Gauge for adjusting clearance..... 54
Gear, details..... 86
valve.....103, 111
Governor, adjusting.....82, 143
Brown engine..... 78

PAGE
Governor, case, location..... 117
in position..... 139
inertia.....138, 139
Porter fly-ball..... 106
position..... 99
Rites inertia, Rice & Sargent engines..... 149
rod, adjusting..... 60
shaft..... 119
Greene cut-off..... 62
Greene-Wheelock engine..... 62
setting valves.. 73
valve gear. 64
Gridiron valve.....62, 84, 88, 159, 161

Hall, Thomas..... 121
Hawkins, E. S.....19, 29
Heavy duty engines..... 156
High-pressure side of Greene-Wheelock cross-compound engine..... 63
valve..... 140
setting..... 138
Hill valve..... 62
Horizontal engine, valve gear..... 84
travel of pin..... 97
Horse power with different steam pressures and points of cut-off, Corliss engines.....56, 57

Indicator diagram.....35, 194
making..... 9
rig..... 141
use.....30, 82, 118, 134, 142
Inertia governor.....138, 139
Inlet valve.....65, 67
gear, operation..... 146
Inside lap..... 32

Johnson, F. L..... 130

Keying up pin bearings..... 120

Lap.....32, 50, 163, 165, 175
adjusting.....79, 89, 157
valves for..... 75
amount.....59, 154, 177, 194, 201
changing.....19, 20
definition..... 4
effect..... 4

PAGE

Lap, exhaust....10, 32, 36
definition.... 10
effect of changing....127, 128
finding....21, 23, 24, 25, 26, 27
inside.... 32
necessity for.... 31
negative, definition.... 11
outside.... 32
steam....31, 32
effect of changing....127, 128
use.... 4
valve....45, 46
Laying out valve motion.... 18
Lead....33, 51
action.... 4
amount....
81, 82, 89, 99, 122, 126, 137, 177
definition.... 4
effect.... 3
exhaust....33, 34, 36
finding....21, 23, 27
for setting valves.... 155
of low-pressure valve, condensing engine.... 125
of low-pressure valve, non-condensing engine.... 125
on bottom end, low-pressure valve side.... 139
steam.... 34
valve showing.... 98
Linear advance of eccentric.... 11
Link, details.... 107
in valve gear....103, 104
Low-pressure eccentric, adjustable... 139
adjusting.... 137
valve.... 135
back platen.... 137
setting....126, 135
side showing lead on bottom end. 139
side showing lead on top end.... 137

McIntosh & Seymour engine.... 84
Main valve, action....46, 48
in position.... 49
of Meyer combination .38, 39
setting.... 101
Marks on valve seat.... 59
stems.... 101
Maximum admission openings.... 101

PAGE

Maximum opening.... 36
port opening.... 124
travel of valve.... 167
Meyer cut-off valve.... 38
Minimum travel of valve.... 168
Multiported cut-off valve.... 45
valve....46, 76, 84, 97

Negative exhaust lap.... 10
lap, definition.... 11
Nickel, F. F.... 180
Non-condensing engine, lead of low-pressure valve.... 125

Opening, maximum.... 36
Outlet valve....65, 68
Outside lap....31, 32

Period of admission.... 13
finding.... 14
Piston, position....6, 7, 8, 9
finding.... 26
valve.... 96
Buckeye.... 100
engine.... 121
engines, table showing effect steam lap, exhaust lap, travel and angular advance.... 128
Platen of low-pressure valve....135, 137
Plates, pressure....107, 108
Plock, John L.... 53
Plug, valve....64, 65
Plumbing wrist plate and rocker arm. 58
Point of admission..21, 33, 34, 35, 36, 124
of compression....34, 35, 36
finding.... 23
of cut-off..4, 15, 18, 34, 35, 36, 40, 41, 42, 43, 44, 99, 124
Corliss engines....56, 57
finding....22, 24
of exhaust.... 17
release.... 18, 34, 35, 36, 40, 71
finding.... 23
Port opening, maximum.... 124
steam, width.... 34
width.... 37
Porter-Allen engine.... 103
Porter fly-ball governor.... 106
Position of eccentric...41, 45, 46, 51, 176
changing.... 43

PAGE
Position of valves..... 41
Positive exhaust lap..... 10
Pressure, cylinder..... 96
equalizing in exhaust pipes. 181
plates, details.....107, 108
zero point..... 185
Pump, duplex..... 180
Putnam engine..... 130
valve gear..... 129

Radius, eccentric, changing..... 20
Reach rod, length..... 58
Regulator, Putnam engine.....130, 132
Release, point of..18, 23, 34, 35, 36, 40, 71
"Reliance" engines..... 156
Reynolds (1890) and girder frame Corliss engines..... 152
long-range cut-off..... 172
Rice & Sargent engine..... 145
Riding cut-off valve..... 38
Rites inertia governor.....135, 143
Rice & Sargent engines..... 149
Rock shaft..... 134
Rocker arm.....94, 171
plumbing..... 58
Rod, angle, finding..... 16
correcting for angle of.....17, 18
cut-off, adjusting..... 150
dashpot, length.....58, 59, 154
eccentric, length..42, 73, 75, 170, 171
too long..... 72
exhaust valve, length..... 60
governor, adjusting..... 60
length..... 46
reach, length..... 58
test for proper length..... 101
valve, length..... 168

Safety stop, setting..... 82
Seats, valve..... 88
Separate steam and exhaust valves... 113
Setting blowing-engine valves..... 198
eccentric..... 102
engine at half stroke..... 51
exhaust valve..... 81
high-pressure valve..... 138
main valve and eccentric.... 101
piston valves..... 100
safety stop..... 82

PAGE
Setting steam valves.....74, 108
suction valve..... 194
valves.....29, 46
Brown engine..... 79
Buckeye engine..... 97
Fitchburg engine...117, 119
Fleming piston-valve engine..... 121
Greene-Wheelock engine..... 73
horizontal Corliss steam engines..... 54
McIntosh & Seymour engine..... 89
Porter-Allen engine.....109
Putnam engine..... 130
Reynolds long-range cut-off..... 177
Rice & Sargent engine.. 147
Wright engine..... 168
Shaft governor, action..... 119
Side shaft, diagram..... 131
Slide valve..... 3
D..... 19
Speed of valve motion.....41, 42
Steam, admission..... 40
and cut-off, Meyer cut-off valve..... 39
chest, valves removed..... 49
engines, Corliss..... 53
lap.....4, 31, 32
effect of changing.....127, 128
use..... 4
lead..... 34
port, width..... 34
pressures, Corliss engines...56, 57
valve.....113, 114
balanced..... 115
equalizing movement... 82
motion..... 115
open at both ends when hooked up..... 174
operation..... 76
setting.....74, 108
Steam, exhaust valve, length..... 81
valve, length..... 170
marks..... 101
Stroke, adjusting..... 89
events, determining..... 124
measuring..... 91
Sturtevant compound engine..... 135

PAGE

Sturtevant compound engines, details and measurements... 144
Suction air valve, opening..... 188
valve, setting..... 194

Table of laps and lead for setting valves..... 155
showing effect of changing steam lap, exhaust lap, travel and angular advance, for piston-valve engines..... 128
Tandem compounds, valve setting... 125
Templets for valve setting..... 122
Test for proper length of rods..... 101
Tipping motion of link..... 104
Travel..... 101
direction..... 41
effect of changing.....127, 128
horizontal, of pin..... 97
of crank..... 41
of eccentric..... 70
of valve..32, 34, 36, 39, 41, 42, 46, 70, 74, 84, 95, 97, 114, 117, 165, 167, 168, 170
adjusting..... 73
changing..... 20
finding.....22, 23, 26, 27
Trip cam..... 68
Trouble, causes..... 72
Trunnions, position..... 110

Valve action.....6, 175
Meyer combination..... 39
adjusting.....111, 117
for lap..... 75
and steam passages, sectional view, Putnam engine..... 132
arrangement in cylinder..... 161
balanced..93, 96, 103, 113, 115, 135
chest.....93, 94
circle..... 30
cross-exhaust..... 181
cut-off.....95, 97
position..... 99
cylinder, details..... 107
D slide..... 19
diagram, use.....21, 30
double-ported.....97, 156
equalizing movement..... 81

PAGE

Valve exhaust.....68, 113
adjusting..... 75
setting.....81, 148
flat.....93, 96, 103
gear.....103, 196, 198
air compressor..... 191
Buckeye engine.....92, 93
centralization, double eccentric engine..... 61
Fitchburg engine.....111, 112
Greene-Wheelock engine .. 64
operation..... 146
Putnam engine..... 129
gridiron.....62, 84, 88, 159, 161
high-pressure.....138, 140
Hill..... 62
inlet.....65, 67
lap.....45, 46
low-pressure..... 135
main, action..... 46
adjusting action..... 48
in position..... 49
Meyer cut-off..... 38
motion.....111, 113
laying out..... 18
speed.....41, 42
movement.....87, 159, 164
multiported.....76, 84, 97
operation..... 85
outlet.....65, 68
piston.....96, 100
plug.....64, 65
position..... 41
corresponding to given crank position..... 30
riding cut-off..... 38
rods, length..... 168
seats..... 88
seat, marks..... 59
setting.....29, 46
Brown engine..... 79
Buckeye engine..... 97
double eccentric engine. 60, 61
effects of changing..... 19
Fitchburg engine...117, 119
Fleming piston-valve engine..... 121
Greene-Wheelock engine 73
horizontal Corliss steam engines..... 54

PAGE
Valve setting, McIntosh & Seymour engine..... 89
Porter-Allen engine..... 108
Putnam engine..... 130
Reynolds long-range cut-off..... 177
Rice & Sargent engine.. 147
Wright engine..... 168
showing lead..... 98
slide..... 3
steam.....113, 114
equalizing movement.... 82
open at both ends when hooked up..... 174
operation..... 76
setting..... 74
stems, length..... 170
marks..... 101
suction, opening..... 188
travel..4, 10, 11, 32, 34, 36, 39, 42, 70, 73, 74, 84, 95, 97, 114, 117, 165, 167, 168, 170, 185, 188
changing..... 20
PAGE
Valve travel, finding.....22, 23, 26, 27
with and without lap.... 4
Volume, zero point..... 185
Volumetric efficiency of compressor.. 188

Wedge adjustment for keying up pin bearings..... 120
Wheelock arrangement of valves .... 62
Wright automatic cut-off engine, view of exhaust side..... 160
automatic cut-off engine, view of steam side..... 158
steam engine..... 159
William..... 159
Wrist plate..154, 157, 161, 162, 164, 168, 178, 191, 199, 201
centering..... 170
central marks on hub .... 59
in extreme position..... 59
plumbing..... 58

Zero point of pressure and volume... 185
Zeuner slide-valve diagram.....23, 29